User Manual

B700 turnstile

Please read this manual before using this turnstile for the first time! Act in accordance with the manual and keep it in a safe place for later use or for the following owner.

EN - Original User Manual - 1.4 | 2023

CONTENTS

FOREWORD

This manual enables you to operate and maintain the turnstile correctly. Possible options are briefly described. The Operation chapter explains the control unit. Among other things, it describes how you can change various settings. The Maintenance chapter is extremely important to ensure that you can continue to operate your turnstile problem free in the long term.

Please read this user manual carefully before using the turnstile.

Store the manual in a safe place to be able to refer to it later if required. This description is intended for the operator of the turnstile. The installer uses a separate manual to assemble and install the turnstile.

The installer uses an installation scheme for the control unit concerned and works according to the applicable standards. In the event of a fault, you should contact a Heras certified technician. A connection diagram can be found at the end of this document.

1 PREFACE

1.1 MANUFACTURER / SUPPLIER

Manufacturer: Heras B.V.
Hekdam 1, 5688 JE Oirschot
Netherlands
Tel.: +31(0)499-551255
www.heras.com

Technical Construction File: Heras BV, manager PD

1.2 SERVICE / MAINTENANCE

In the event of problems, failures or questions you can contact:

Heras Netherlands	Telephone	+31(0) 882 740 274
Heras Germany	Telephone	+49 (0) 2872 94980
Heras UK	Telephone	+44(0) 808 164 2250
Heras France	Telephone	+33(0) 3 88 067 000
Heras Norway	Telephone	+47(-) 22 900 555
Heras Denmark	Telephone	+45(0) 7586 8296
Heras Sweden	Telephone	+46(0) 77 1506050
Heras Export	Telephone	+31(0) 499 551 523

1.3 DEFINITIONS: USER / OPERATOR / ENGINEER

User: Anyone using the turnstile.

Operator: A user who is familiar with all safety aspects dealt with in this manual. Operators are not allowed to carry out any installation work on the turnstile unless explicitly specified.

Engineer: The engineer is a Heras fitter (or an engineer employed by the customer who has been given explicit permission in writing from Heras) who is qualified to perform technical interventions on the turnstile.

1.4 PRESCRIBED USE / APPLICATION

Only the correct installation and maintenance by an authorised/qualified company or person in agreement with the user manual, logbook, checklists and maintenance lists can ensure the safe operation of the system.

A qualified person is, according to EN 12604, a person who has the required training, qualified knowledge and practical experience required to install, test and maintain the turnstile system correctly and safely.

1.5 CONFORMITY WITH EUROPEAN DIRECTIVES

The installation complies with the following EU Directives/ regulations:

2014/35/	EU	Low voltage directive
2014/30/	EU	EMC Directive (electromagnetic compatibility)

UK	Low Voltage Electrical Equipment (Safety) Regulations 1989
UK	Electromagnetic Compatibility Regulations 2016

A Declaration of Performance (DoP) and Declaration of Conformity (DoC) are obligatory for this product. The DoP and DoC are included in Appendix A.

1.6 DELIVERY

The turnstile must be installed, connected, set up and commissioned by a fitter or an engineer who also connects and programs any accessories. The control unit is adjusted to the options/accessories agreed with the user. The relevant options are laid down during hand-over.

Of course, you can add optional/accessories afterwards. Contact your supplier for this.

Turnstiles are always delivered fully tested.

1.7 DELIVERY OF THE TURNSTILE

After installation and commissioning, by a Heras technician or a technician trained by Heras, the cover of the turnstile must be closed. This is done to prevent unauthorised access.

2 SAFETY

2.1 EXPLANATION OF THE SYMBOLS

Caution:	To prevent personal injury, you must observe the safety instructions below.
Note:	To prevent material damage, you must observe the safety instructions below.
Information:	This is followed by further information or by a reference to other documents.
Warning:	Risk of limbs getting crushed.
Warning:	Risk of injury to hands by rotating parts.

2.2 GENERAL SAFETY INSTRUCTIONS

- The operator must read the entire user manual before the turnstile is used for the first time. The instructions stated in the user manual must be observed and complied with. All other forms of use can cause unexpected hazards and are forbidden.
- All faults which might present a source of danger to the user or to third persons must be eliminated immediately.
- All alterations or extensions to the turnstile must be carried out by qualified personnel using parts which the manufacturer has defined as suitable for such alterations or extensions. Any failure to comply with these instructions will be considered as non-compliant behavior and will invalidate the manufacturer's guarantee, as a result of which the risk entirely transfers to the user.

- Improper usage, servicing or ignoring the operating instructions can be a source of danger for persons, and/or result in material damage.
- If the meaning of any part of these instructions is not clear, then please contact your supplier prior to using the equipment.
- This manual should always be available at the turnstile's location of use. This manual must be thoroughly read and applied by all persons charged with the operation, maintenance and repair of the controller.

2.3 INTENDED USE

The turnstile is intended to control access to a specific plot, premises or site.

2.4 SAFETY DURING USE

Children or people with a disability must not operate the turnstile. Parents must supervise their children to prevent them playing with the turnstile.

➔ PARENTS ARE RESPONSIBLE FOR THEIR CHILDREN 🡐

- The turnstile rotor must be able to move freely without there being obstacles in the turnstile rotor passage.
- Do not insert any object through, over or under the turnstile which might block the turnstile.
- Do not climb on or travel with the rotor. This can lead to injuries being sustained.
- Always ensure the top cover of the turnstile is locked.
- Do not use the turnstile to evacuate persons.
- Appropriate Emergency door/exit should be used in emergency.
- Do not push or lean on the rotor. Pushing on the rotor may lead to excessive friction on the release mechanism; the rotor may fail to release until the pressure is removed from the rotor.

2.5 SAFETY DURING INSTALLATION, MAINTENANCE AND DISASSEMBLY

- When work is carried out, while cleaning it or manually operating the turnstile, the power supply to the system must be switched off and it must be ensured that it cannot be switched on unexpectedly.
- The turnstiles release mechanism contains rotating parts. They are located under the cover. Beware of rotating parts when carrying out maintenance work on the turnstile head mechanism.

3 OPERATION

3.1 ENTRY/EXIT TURNSTILE - NORMAL USE

When remote push button controls are installed it is possible for an operator to allow persons to pass through the turnstile in either entry or exit direction. Push button units can be used together with intercom systems which allow visitors to speak to someone in order to gain entry / exit through the turnstile.

- ENTRY:
  Press the “Entry” button. The turnstile allows a person to enter the premises.

- EXIT:
  Press the "Exit" button. The turnstile allows a person to exit the premises.

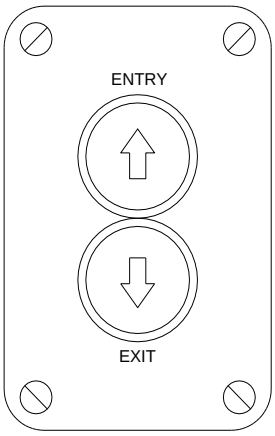

View of a typical Push Button Unit

3.2 ENTRY/EXIT TURNSTILE - POWER FAIL (OPTIONAL)

In case of power failure some turnstile will remain locked depending on the configuration requested. If a locked solenoid is requested, free rotation can be obtained by means of an override key switch mounted in the overhead section as detailed below.

FAIL LOCKED configuration can be equipped with override key switches to allow the turnstile to be unlocked for both entry and exit

FAIL UNLOCKED on EXIT configuration can be equipped with an override key switch to allow the turnstile to be unlocked on entry; it will automatically unlock to allow free rotation on exit.

FAIL UNLOCKED configuration is not fitted with any key switches, as it will automatically unlock to allow free rotation on both entry and exit.

The key switches are located in the top channel section of the turnstiles. There are one or two key switch positions one for each direction of rotation.

Please note if the manual override key switches for both entry and exit are operated at the same time the turnstile will free wheel in both directions. This is not recommended.

To release the turnstile into the manual mode, the key should be inserted into the key switch and turned through 90-degrees. This will allow the rotor to freely rotate.
To re-engage, simply turn the key to its original position.

Only authorized personnel should keep the override keys.

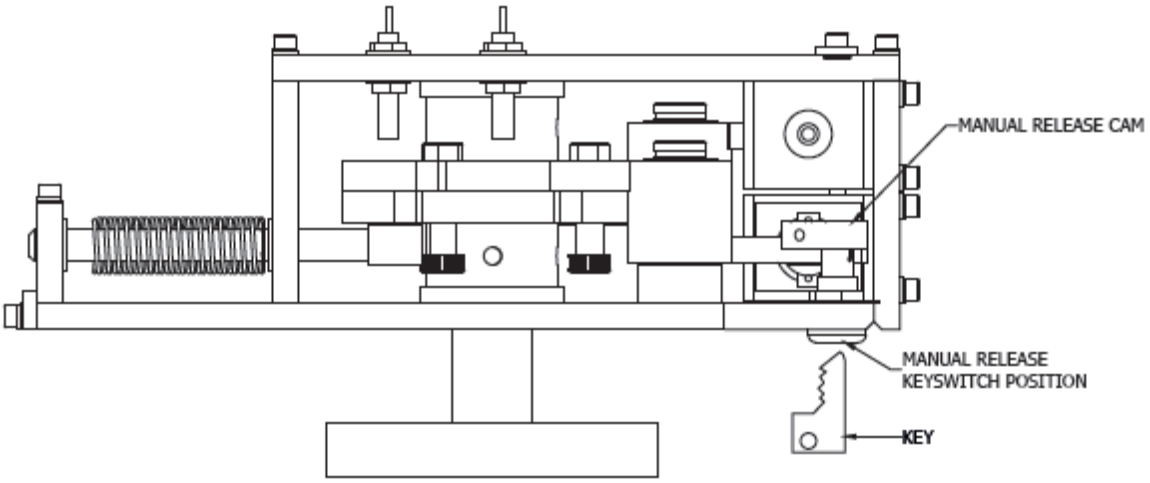

4 DESCRIPTION

4.1 B700 TURNSTILE

The turnstile operating mechanism is of an electro-magnetic solenoid release type, with bi-directional non-return tooth sprocket assembly to select the direction of the rotor and the pawl-locking feature.

The ratchet system ensures that the rotor returns to the locked position after each movement. Intermediate movement is restricted preventing unauthorized access. Upon isolation of the electrical supply, the turnstile remains locked. This is the factory standard and is referred to as “fail-locked”; it is possible to have the turnstile configured (at the factory) so that upon isolation of the electrical supply, the turnstile unlocks. This configuration is referred to as “fail-unlocked”. The turnstile can be released for one rotation by means of push button control and/or card access control reader system.

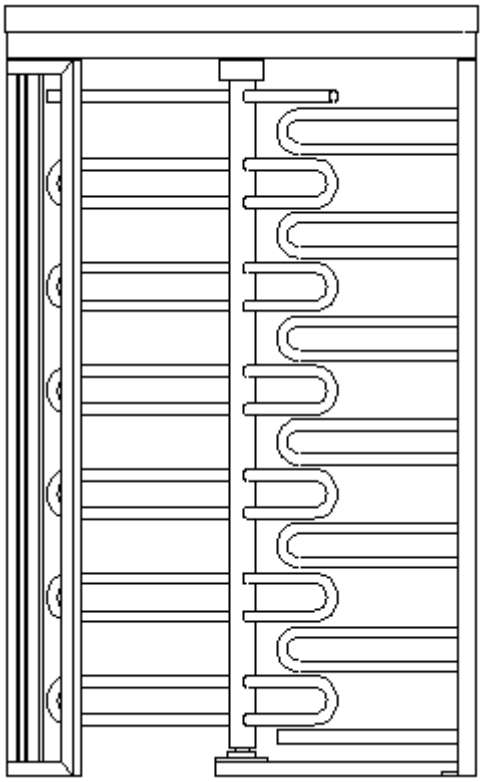

B700 turnstile

5 EQUIPMENT OPERATION

5.1 PUSH BUTTON CONTROL

When remote push button controls are installed it is possible for an operator to allow persons to pass through the turnstile in either entry or exit direction. Push button units can be used together with intercom systems which allow visitors to speak to someone in order to gain entry / exit through the turnstile.

5.2 WAY-MODE INDICATORS

Optionally, a turnstile can be fitted with a red/green light which indicates a mandatory walking direction. This is not intended to give way and is usually used with multiple turnstiles where one section is specifically for inbound traffic and one section for outbound traffic. The red or green lamp will illuminate permanently to indicate the direction.

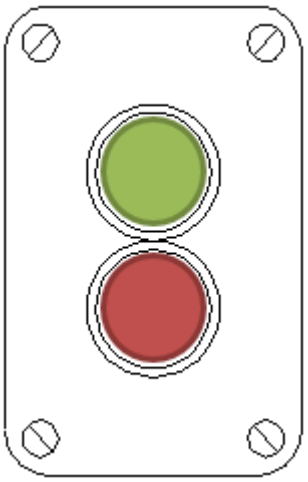

Example of light for mandatory direction

5.3 CARD READER SYSTEMS

5.3.1 General

Please note that this section is intended to provide a basic understanding of the factors that should be taken into account when it is intended to connect card readers that have not been supplied by Heras. This information is only relevant to

the experience Heras has gained over the past 20 years and is based on our understanding of the card reader systems that have been interfaced to our turnstiles in the past.
This should not be used as a definitive guide to all card reader systems that may be connected to our turnstiles (or that you intend to connect). You should consult your card reader provider to clarify that the reader system is compatible with our turnstiles and are capable of providing the correct functionality.

5.3.2 Door open time

As mentioned in the previous section Card Readers Systems can be interfaced to the turnstile for entry and/or exit. It is necessary that the output from the card reader system is a volt free contact and has a normally open configuration. Many card reader systems refer to the period of time that the relay output (of the reader system) is activated as “door open” time. The turnstile control panel will only allow one rotation per “door open” (or activation of relay) regardless of the duration time of the “door open”. This is necessary to avoid the turnstile rotating more than once per “door open” time.

5.3.3 Transit time

It is important to note that it is possible for a person to transit through the turnstile very quickly; this transit time is dependent on the person using the turnstile and therefore varies dependent on how familiar the person is with the turnstile and card reader. For persons who are familiar with the turnstile and card reader system and who are regular users this transit time can be as low as 2 seconds.

5.3.4 Card readers without feedback

When a card reader system does not have a “feedback” input which is usually used to reset the “door open time” then it’s very important
that the “door open” time of the card reader system be set to a maximum of 1 second in order to allow a quick transit through the turnstile. Please note that many card reader systems may have a default time as high as 5 seconds this will considerably slow down the transit time for each entry/exit (rotation). In other words the transit time will be at least as long as the “door open” time (therefore at least 5 seconds).

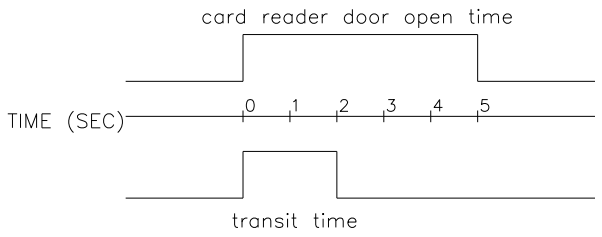

Representation of 2 second transit time with 3 second lag

5.3.5 Card readers with feedback

When a card reader system which requires “feedback” is installed then we would recommend that the “door open” time should be set to the same value as the “Re-Lock” time minus 2 seconds (see section 5.3). This type of card reader system requires an output from the turnstile to tell it when to lock the turnstile (this is provided as standard). This output which is connected to an input on the card reader system is usually referred to as “feedback”.
This type of card reader system is used when more accurate monitoring of access/egress to site is needed.

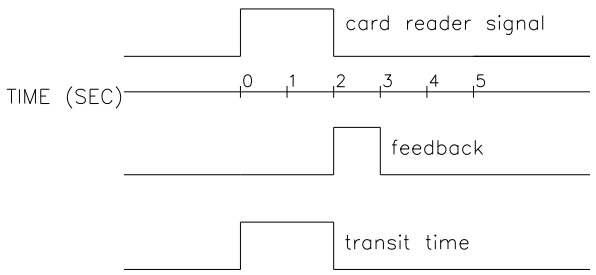

Representation of 2 second transit time with feedback

5.4 RE-LOCK TIMER

When an entry or exit signal is received from either a push button or card reader the turnstile will unlock in the relevant direction, should no person walk through the turnstile then the turnstile controller will relock after 30 seconds. This parameter is preset within the controller’s software.

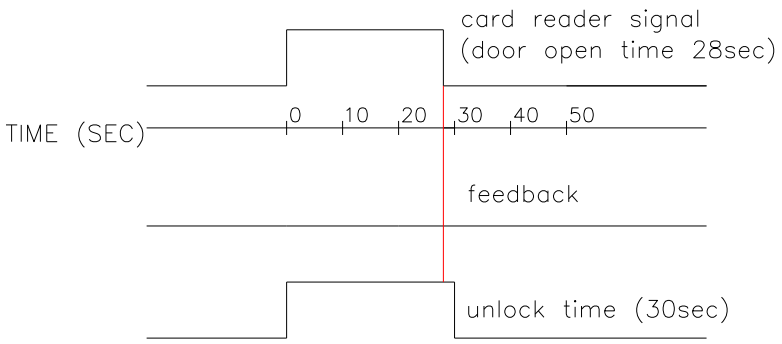

Representation of no transit (entry or exit to site) & 30 sec relock

5.5 ELECTRICAL ISOLATION

To isolate the turnstile it is necessary to switch off the unit using the isolator located at the top of the turnstile unit.

Do not work on the turnstile until the unit has been isolated!

6 TECHNICAL DETAILS

The contents of the following sections are intended solely for reference by qualified engineers/personnel. This section is not intended for the user or operator.

6.1 CONTROL PANEL

The control panel for the turnstile incorporates a PLC, a switch-mode power supply unit and a set of field termination connectors/terminals.

The connection details and layout of the control panel is shown below.

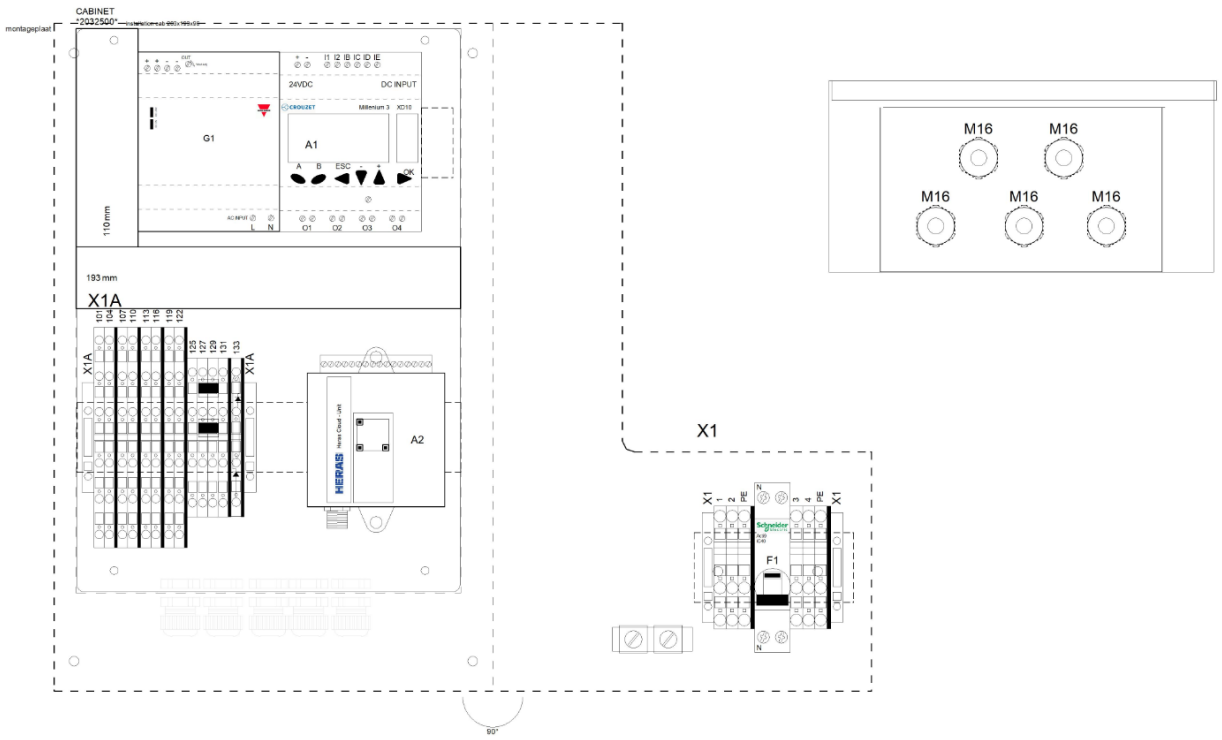

View of Control Panel

6.2 MECHANICAL ARRANGEMENT AND DRIVE OPERATION

The main framework is constructed from steel section; surface finished to clients specified RAL color. The central rotors are of steel hollow section; surface finished to clients specified RAL colors. The rotor arms are of steel circular hollow section. The bearing housings are fully enclosed above ground level. All bearings are normal duty, sealed. Lifetime lubricated with high quality all weather grease to provide minimum maintenance operation.

6.2.1 HEAD MECHANISM

The turnstile head mechanism is located at the top of the turnstile and is coupled to the turnstile rotor. There are two 24VDC solenoids used to secure and release the turnstile. When the relevant solenoid is energized / activated this allows the turnstile to release in either the entry or exit direction. There are two PNP 24VDC normally closed proximity limit switches, which are used to tell the control panel when to de-energize the relevant solenoid and thus relock the turnstile after one rotation.

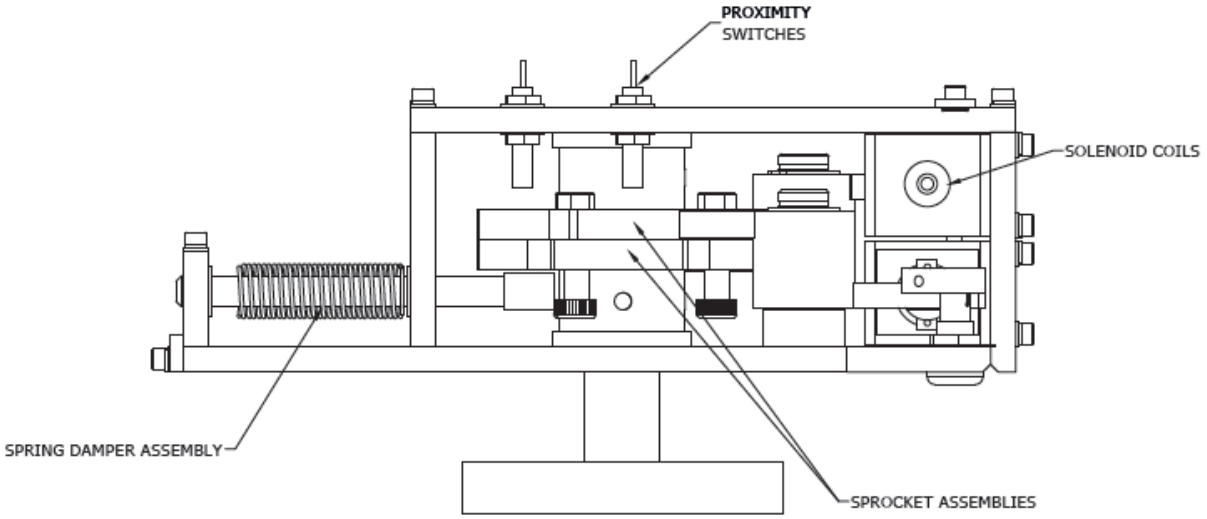

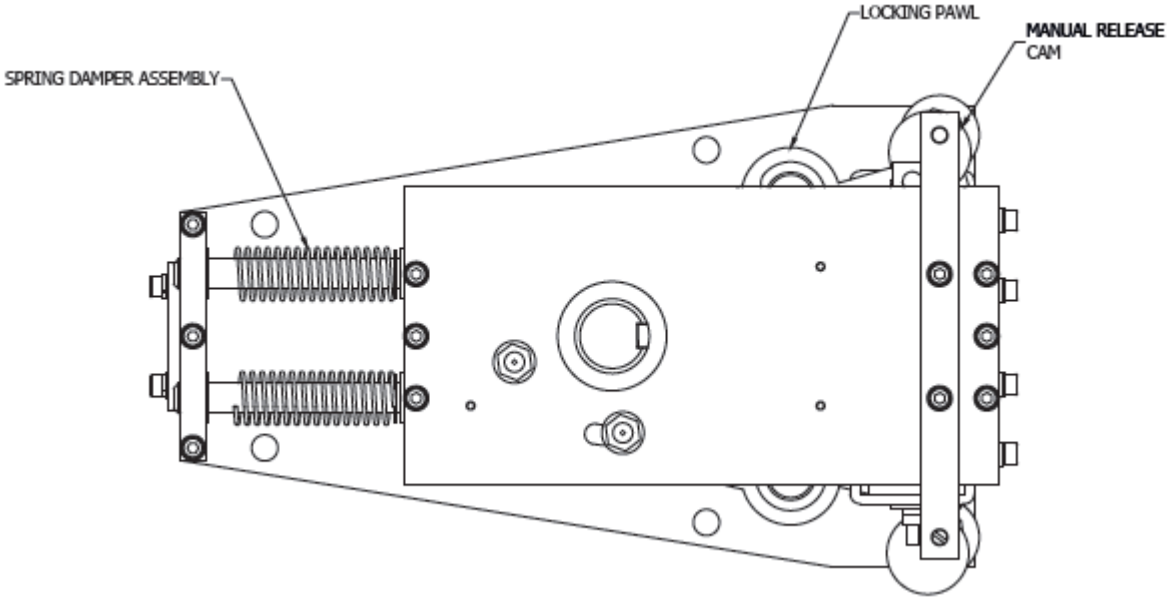

6.3 PNP PROXIMITY SWITCHES

Please note only PNP proximity switches should be used with the turnstile controller; NPN sensors will not work with the controller. These must be of a normally closed configuration.

Entry & Exit Proximity Switch Setting

- Check the gap between the bolts and the proximity switch and adjust if necessary by adjusting the height of the proximity switch with the nuts until an opening of 1 mm is achieved for all proximity switches.
- When the switch detects then the yellow LED at the end of proximity switch will switch off.
- Check the operation of the turnstile in the relevant direction using a signal from the control equipment i.e. pushbutton, card reader etc.

6.4 PROGRAMMABLE CONTROLLER

The control logic for the turnstile incorporates a Programmable Controller as the main control component. This incorporates input terminals and output terminals. The program being stored in a Random Access Memory (RAM).

The inputs are digital and activate when + 24 Volts is fed into the relevant input terminal. Any proximity limits connected to the inputs of the PLC must be PNP type. The outputs are relay contacts which are capable of switching 8 Amp resistive loads.

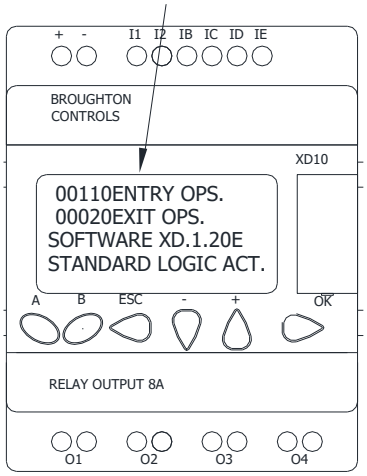

6.4.1 Logics and logic links

Using keys located on the front of the PLC, it is possible to have the turnstile operate in four different control logics. This enables us to amalgamate 4 versions

of software in to one, allowing us to standardize our control panels for conventional turnstiles, as well as stadia and tripod turnstiles.

The followings control logics are available:

- Standard Logic
- Stadia Logic
- Tripod Logic
- TEAMCARD Logic

6.4.1.1 Standard logic

This is the default logic of the turnstile. This logic is only active when any of the other three logics are not switched ON.

This logic is suitable when both entry & exit solenoids are configured to lock when power is removed from the turnstile. With this configuration output 3 & output 4 of the controller will work as entry and exit feedbacks respectively.

6.4.1.2 Stadia logic

This logic works as per the standard logic with exception to output 4. When stadia logic is used then output 4 works in tandem with output 3. This allows output 3 to be kept as entry feedback while output 4 is used to switch 24VDC to an electromechanical counter, which records the number of entry rotations. This logic also activates the Stadia Counter on the PLC LCD.

The procedure for switching this control logic on/off is as follows:

- To switch between ON/OFF Press and hold the A button together with the button located on PLC for 10 continuous seconds.

6.4.1.3 Tripod logic

Tripod logic simply inverts output 1 and output 2 of the controller to work with entry & exit solenoids that are configured to unlock when power is removed from the turnstile.

The procedure for switching this control logic on/off is as follows:

- To switch between ON/OFF Press and hold the B button together with the button located on PLC for 10 continuous seconds.

6.4.1.4 TEAMCARD™ Logic

This logic is only applied in the UK and is linked to the TeamCard™ system.

TEAMCARD™ logic gives two-stage early and late feedback to the TEAMCARD™ system in conjunction with an additional relay, this allows the Stadia Counter to be used together with TEAMCARD™.

The procedure for switching this control logic on/off is as follows:

- To toggle between on and off, press and hold the B button together with the A button located on the PLC for 10 seconds.

6.5 CONTROLLER PARAMETERS VARIABLES

The PLC controller has three parameters which can be switched on or off using the buttons located on the front of the PLC controller.

To view the parameter screen press and hold the down the minus button.

The parameters are as shown above.

6.5.1 NORMALLY CLOSED FEEDBACK (NC FEEDBACK)

This function will allows feedback outputs O3 & O4 to be switched from normally open to normally closed during standby. The procedure for switching on/off this parameter is as follows see picture of controller here above:

- Press and hold button on PLC to view parameter screen

- If "00000NC FEEDBACK" is shown then this indicates that the function is currently switched OFF
- If "00001NC FEEDBACK" is shown then this indicates that the function is currently switched ON
- To switch between ON/OFF Press and hold the button located on PLC for 10 continuous seconds.
- Once again press and hold the button on PLC to view parameter screen and verify the parameters.

6.5.2 EARLY FEEDBACK (EARLY FEED)

This function allows the feedback outputs to be activated at the start of the turnstile's rotation. When this function is off the feedback outputs will activate towards the end of the turnstile's rotation. The procedure for switching on/off the early feedback parameter is as follows see picture of controller on previous page:

- Press and hold button on PLC to view parameter screen

- If "00000EARLY FEED" is shown then this indicates that the a function is currently switched OFF
- If "00001EARLY FEED" is shown then this indicates that the function is currently switched ON
- To switch between ON/OFF Press and hold the button located on PLC for 10 continuous seconds.

- Once again press and hold the button on PLC to view parameter screen and verify the parameters.

6.5.3 HOLD OPEN LOGIC

When this parameter is active an open input will allow the turnstile to rotate more than once per release signal. The number of rotations is dependent on the length of the signal. Should the release signal be longer than the average transit time then it will be possible to rotate the turnstile rotor more than once which is suitable for card readers using free entry/exit time zones; but will be unsuitable for normal operation.

Important Note: When a hold open input is active the turnstile will always momentarily relock the turnstile rotor after each complete rotation it will then immediately unlock the rotor to allow the next rotation. This feature is

necessary in order to stop the rotor being pushed at velocity, which could result in injury to users. Should both entry and exit hold open inputs be activated together then the controller will default to exit. It will not allow the turnstile be held open in both directions (entry and exit). The procedure for switching on/off the parameter is as follows: (see picture of controller on section 6.5)

- Press and hold button on PLC to view parameter screen

- If "00000HOLD OP LOG" is shown then this indicates that the a function is currently switched OFF
- If "00001HOLD OP LOG" is shown then this indicates that the function is currently switched ON
- To switch between ON/OFF Press and hold the both A & B
- buttons located on PLC for 10 continuous seconds.

- Once again press and hold the button on PLC to view parameter screen and verify the parameters.

6.5.4 FULEX LOGIC

FULEX stands for Fail Unlocked Exit. This logic is used when only the exit solenoid is configured to unlock when power is removed from the turnstile. Please note to achieve this for entry in place of exit, i.e. only the entry solenoid should unlock when power is removed from the turnstile then it is merely necessary to interchange the entry field terminations with those of the exit. The procedure for switching this control logic on/off is as follows:

- To switch between ON/OFF Press and hold the A button together with both the button and B located on PLC for 10 continuous seconds.

6.6 POWER SUPPLY UNIT

6.6.1 POWER SUPPLY UNIT – STANDARD

The control panel has a 110-230VAC 50/60Hz to 24VDC switch mode PSU which provides the low voltage for the controls and solenoid. The power supply unit also takes care of thermal overload of the 24VDC output this provides the electrical protection on the inputs/outputs of the control panel as well as the solenoids and proximity switches.

6.7 FAULT DIAGNOSES

In the event that the turnstile will not rotate, it is possible to test the system via the Card reader test key switch as follows:

- Change the key switch position from Normal operation (position 1) to Card reader isolate (position 2). This will isolate either the entry or exit card readers depending on which key switch is being operated.
- Change the key switch position to turnstile rotate (position 3), and the turnstile should rotate.
- If the turnstile rotates the fault is with the Card reader signal.
- If however the turnstile does not rotate the fault may be with the equipment. In this event please contact our service department Heras Service and Maintenance. See chapter 1.2 of this user manual.

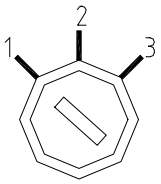

7 MAINTENANCE

The contents of the following sections are intended solely for reference by qualified engineers/personnel. This section is not intended for the user or operator.

7.1 GENERAL

The turnstile equipment described in this manual is designed to a high standard in order to cope easily with long periods of arduous duty. It is however, necessary to maintain the working efficiency at a level, which reduces wear and tear and so avoids premature breakdown.

A scheme of planned preventative maintenance will ensure an optimum return of reliability and security, at a minimum cost. The work involved can be carried out by Heras Service and Maintenance who will be pleased to quote for a preventative maintenance scheme.

A system logbook should be kept for the system and a record kept of faults, damage, breakdowns and spares used. This record will help to identify any continuing problems such as worn or miss-aligned components.

- When working on the turnstile or cleaning it, the power supply to the system must be switched off and protected from unauthorized switching on.
- If the turnstile rotor must be moved manually, first turn the system circuit breaker in the turnstile to the "off" position and protect it from being switched on (e.g. by locking the cover).

7.2 ROUTINE MAINTENANCE

Mechanical Check List.

7.2.1 SIX MONTH MAINTENANCE

A. The turnstile should be cleaned externally every month with a mild non-abrasive detergent.
B. Check overall turnstile condition for deterioration.
C. Check foundation bolts are secure torque to 50Nm.
D. Check control panel for correct operation.
E. Check all cable terminations are secure and undamaged.
F. Check bottom bearing assembly and grease with good quality multipurpose grease. Operating temperature of grease -30° to +140° Celsius.
G. Check full operation of turnstile by releasing exit and entry from control points.

7.2.2 ANNUAL MAINTENANCE

As per six month schedule plus the following:

H. Check proximity switch operation.
I. Check solenoid spring functionality and check integrity of spring.
J. Check solenoid plungers are clean and free from contamination.

Please note: Under no circumstances use grease on the mechanism as this may solidify under cold conditions and the mechanism may jam.

8 DECOMMISSIONING AND REMOVAL

Ensure that the turnstile is dismantled by a qualified technician.
Disconnect the electricity supply in a safe way from the turnstile.
Use the installation manual.

The decommissioning of the unit should be carried out in a safe manner; care should be taken, to first ensure that the electrical supply has been isolated, and disconnected. We recommend that the incoming electrical supply cable is first tested to ensure it is dead prior to any decommissioning work being carried out.

The turnstile does not have any materials considered hazardous to health. The disposal of the all components should be carried out in accordance with local legislation and guidelines.

9 SPARE PARTS

Description	SAP Number	Navision UK Number	Quantity
Controller XD10	2033020	1000831	1
PSU 60W	2032103	100088	1
M8 2- Proximity Sensor	2032104	1001474	2
Mechanical Head	2032862 (without solenoids and prox. switches)	1008662	1

Bottom Bearing Rotor	2032108	1001441	1
Solenoid fail lock	2032789	1001448	x
Solenoid fail safe	2032790	1001443	x

10 TECHNICAL DATA

10.1 SPECIFICATIONS B700 TURNSTILE

Turnstile	**B700**
Overall Height [mm]	2317
Headroom Height [mm]	2080
Min. Height required for Servicing	2500
Overall Width	1360
Color	Powder coating to RAL colors

10.2 ELECTRICAL DATA

B700	
Electrical values	
Power supply	Phase 110-240VAC 50/60Hz Supply rated @ 4 Amps.
Full load current	1,2 Amps @ 110VAC, 0,6 Amps @ 230VAC
Controllers	1 integrated Programmable Controller with provision for connections of remote push button and card access control

The functions described in this manual are designed for the prevailing climatic conditions in Europe.

Appendix A: Declaration DoP/DoC

Declaration of Performance

CE 20

Prestatieverklaring - Leistungserklärung - Déclaration des performances Prestandadeklaration - Ytelseserklæring - Ydeevnedeklaration

DoP No: CE-DOP-2020.02-00

Product type - Producttype - Produkttyp - Type de produit - Produkttyp - Produkttype - Produkttype
Turnstile - Tourniquet - Drehkreuz - Tourniquet - Rotationsgrind - Rotasjonsgrind - Drejekors

Identification code - Identificatiecode - Kenncode - Code d'identification - Identifikationskod - Identifikasjonskode -Identifikationskode
B700

Serial number - Serienummer - Seriennummer - Numéro de type - Serienummer - Serienummer - Serienummer
n/a

Intended use - Beoogd gebruik - Vorgesehener Verwendungszweck - Usage prévu - Avsedd användning - Tiltenkt bruk - Tilsigtet brug
The turnstile is intended to control access to a specific plot, premises or site. De tourniquet is bedoeld om de toegang tot een specifiek(e) terrein, ruimte of locatie te regelen. Das Drehkreuz dient der Zugangskontrolle zu einem bestimmten Grundstück, Gelände oder Standort. Le tourniquet est destiné à contrôler l'accès à un terrain, local ou site spécifique. Rotationsgrinden är avsedd för passagereglering av persontrafik till specifika (arbets)platser, tomter eller områden. Rotasjonsgrindens formål er å kontrollere tilgang til et bestemt areal, lokale eller område. Drejekorsets formål er adgangskontrol til et bestemt areal, lokaler eller sted.

Contact address manufacturer - Contactgegevens fabrikant - Kontaktanschrift des Herstellers - Adresse de contact du fabricant - Tillverkarens kontaktadress - Tillverkarens kontaktadress - Kontaktadresse fabrikant
Heras B.V. - Hekdam 1 - 5688JE Oirschot – Netherlands Heras UK - Herons Way - Doncaster, DN4 8WA South Yorkshire - UK

System of assessment and verification of constancy of performance Systeem voor beoordeling en verificatie van de prestatiebestendigheid System zur Bewertung und Überprüfung der Leistungsbeständigkeit Système d'évaluation et de vérification de la constance des performances System för bedömning och fortlöpande kontroll av byggprodukternas prestanda System for vurdering og verifisering av prestasjonsbestandighet System til vurdering og kontrol af ydeevnens konstans
System 4 - Systeem 4 - System 4 - Système 4 - System 4 - System 4 - System 4
Report number - Rapportnummer – Reportnummer - Numéro de rapport - Rapportnummer - Rapportnummer - Rapportnummer
Test Report B700 v1.0

Declaration of Performance

CE 20

Prestatieverklaring - Leistungserklärung - Déclaration des performances Prestandadeklaration - Ytelseserklæring - Ydeevnedeklaration

DoP No: CE-DOP-2020.02-00

Identification number notified body - Nummer van de controle instantie - Kennnummer der notifizierten Stelle - Numéro d'identification de l'organisme notifié - Det anmälda organets identifikationsnummer Kontrollinstansens nummer - Identifikationsnummer bemyndiget organ
n/a

Harmonised standard - Geharmoniseerde norm - Harmonisierte Norm - Norme harmonisée - Harmoniserad standard - Harmonisert standard - Harmoniseret standard
EN 13241:2003+A2:2016

Declared performance Aangegeven prestaties Erklärte Leistung Performances déclarées Prestanda som intygas Angitte prestasjoner Deklareret ydeevne	**Essential characteristics** Essentiële kenmerken Wesentliche Merkmale Caractéristiques essentielles Väsentliga egenskaper Grunnleggende kjennetegn Væsentlige egenskaber	**Performance** Prestaties Leistung Performances Prestanda Prestasjoner Ydeevne	**Requirements** Eisen Anforderungen Exigences Krav Krav Krav
	Watertightness	NPD	4.4.1
	Release of dangerous substances	NPD	4.2.9
	Resistance to wind load	NPD	4.4.3
	Thermal resistance (where relevant)	NPD	4.4.5
	Air permeability	NPD	4.4.6
	Safe opening (for vertically moving doors)	NPD	4.2.8
	Definition of geometry of glass	NPD	4.2.5
	Mechanical resistance and stability	PASS	4.2.3
	Operating forces (for power operated doors)	NPD	4.3.3
	Durability of watertightness, thermal resistance and air permeability against degradation	NPD	4.4.7

Signed by Ondertekend door Unterzeichnet von Signé par Undertecknad av Undertegnet av Underskrevet af	Gilles Rabot Chief Executive Officer Oirschot 27-05-2021

Declaration of Performance

Prestatieverklaring - Leistungserklärung - Déclaration des performances Prestandadeklaration - Ytelseserklæring - Ydeevnedeklaration

DoP No: CE-DOP-2020.02-00

Assessed products - Beoordeelde producten - Bewertete Produkte - Produits évalués - Produkter som bedömts - Vurderes produkter - Vurderede produkter		
B700		
Technical data	Version: Type: Control unit: Power supply:	Manual operated. Electric lock function Straight, Trombone n/a Phase 110-240VAC
	Height total: Height opening: Width total:	2317mm 2080mm 1360mm

Declaration of Performance

Prestatieverklaring - Leistungserklärung - Déclaration des performances Prestandadeklaration - Ytelseserklæring - Ydeevnedeklaration

DoP No: UKCA-DOP-2020.02-00

Product type - Producttype - Produkttyp - Type de produit - Produkttyp - Produkttype - Produkttype
Turnstile - Tourniquet - Drehkreuz - Tourniquet - Rotationsgrind - Rotasjonsgrind - Drejekors

Identification code - Identificatiecode - Kenncode - Code d'identification - Identifikationskod - Identifikasjonskode -Identifikationskode
B700

Serial number - Serienummer - Seriennummer - Numéro de type - Serienummer - Serienummer - Serienummer
n/a

Intended use - Beoogd gebruik - Vorgesehener Verwendungszweck - Usage prévu - Avsedd användning - Tiltenkt bruk - Tilsigtet brug
The turnstile is intended to control access to a specific plot, premises or site. De tourniquet is bedoeld om de toegang tot een specifiek(e) terrein, ruimte of locatie te regelen. Das Drehkreuz dient der Zugangskontrolle zu einem bestimmten Grundstück, Gelände oder Standort. Le tourniquet est destiné à contrôler l'accès à un terrain, local ou site spécifique. Rotationsgrinden är avsedd för passagereglering av persontrafik till specifika (arbets)platser, tomter eller områden. Rotasjonsgrindens formål er å kontrollere tilgang til et bestemt areal, lokale eller område. Drejekorsets formål er adgangskontrol til et bestemt areal, lokaler eller sted.

Contact address manufacturer - Contactgegevens fabrikant - Kontaktanschrift des Herstellers - Adresse de contact du fabricant - Tillverkarens kontaktadress - Tillverkarens kontaktadress - Kontaktadresse fabrikant
Heras B.V. - Hekdam 1 - 5688JE Oirschot – Netherlands Heras UK - Herons Way - Doncaster, DN4 8WA South Yorkshire - UK

System of assessment and verification of constancy of performance Systeem voor beoordeling en verificatie van de prestatiebestendigheid System zur Bewertung und Überprüfung der Leistungsbeständigkeit Système d'évaluation et de vérification de la constance des performances System för bedömning och fortlöpande kontroll av byggprodukternas prestanda System for vurdering og verifisering av prestasjonsbestandighet System til vurdering og kontrol af ydeevnens konstans
System 4 - Systeem 4 - System 4 - Système 4 - System 4 - System 4 - System 4
Report number - Rapportnummer – Reportnummer - Numéro de rapport - Rapportnummer - Rapportnummer - Rapportnummer
Test Report B700 v1.0

Declaration of Performance

Prestatieverklaring - Leistungserklärung - Déclaration des performances Prestandadeklaration - Ytelseserklæring - Ydeevnedeklaration

DoP No: UKCA-DOP-2020.02-00

Identification number notified body - Nummer van de controle instantie - Kennnummer der notifizierten Stelle - Numéro d'identification de l'organisme notifié - Det anmälda organets identifikationsnummer Kontrollinstansens nummer - Identifikationsnummer bemyndiget organ
n/a

Harmonised standard - Geharmoniseerde norm - Harmonisierte Norm - Norme harmonisée - Harmoniserad standard - Harmonisert standard - Harmoniseret standard
EN 13241:2003+A2:2016

Declared performance Aangegeven prestaties Erklärte Leistung Performances déclarées Prestanda som intygas Angitte prestasjoner Deklareret ydeevne	**Essential characteristics** Essentiële kenmerken Wesentliche Merkmale Caractéristiques essentielles Väsentliga egenskaper Grunnleggende kjennetegn Væsentlige egenskaber	**Performance** Prestaties Leistung Performances Prestanda Prestasjoner Ydeevne	**Requirements** Eisen Anforderungen Exigences Krav Krav Krav
	Watertightness	NPD	4.4.1
	Release of dangerous substances	NPD	4.2.9
	Resistance to wind load	NPD	4.4.3
	Thermal resistance (where relevant)	NPD	4.4.5
	Air permeability	NPD	4.4.6
	Safe opening (for vertically moving doors)	NPD	4.2.8
	Definition of geometry of glass	NPD	4.2.5
	Mechanical resistance and stability	PASS	4.2.3
	Operating forces (for power operated doors)	NPD	4.3.3
	Durability of watertightness, thermal resistance and air permeability against degradation	NPD	4.4.7

Signed by Ondertekend door Unterzeichnet von Signé par Undertecknad av Undertegnet av Underskrevet af	Gilles Rabot Chief Executive Officer Oirschot 27-05-2021

Declaration of Performance

Prestatieverklaring - Leistungserklärung - Déclaration des performances Prestandadeklaration - Ytelseserklæring - Ydeevnedeklaration

DoP No: UKCA-DOP-2020.02-00

Assessed products - Beoordeelde producten - Bewertete Produkte - Produits évalués - Produkter som bedömts - Vurderes produkter - Vurderede produkter		
B700		
Technical data	Version: Type: Control unit: Power supply:	Manual operated. Electric lock function Straight, Trombone n/a Phase 110-240VAC
	Height total: Height opening: Width total:	2317mm 2080mm 1360mm

Declaration of Conformity

Verklaring van overeenstemming - Konformitätserklärung - Déclaration de conformité - Deklaration om överensstämmelse - Konformitetserklæring - Overensstemmelseserklæringen

DoC No: CE-DOC-2021.08-00

EN We herewith declare that the product complies with the following directives and standards.
NL Hiermee verklaren wij dat het product in overeenstemming is met de volgende richtlijnen en normen.
DE Hiermit erklären wir, dass die Produkte der nachfolgenden Richtlinien und Normen entspricht.
FR Par la présente nous déclarons que le produit est conforme aux directives et normes suivantes.
SV Vi deklarerar härmed att produkten överensstämmer med följande riktlinjer och normer.
NO Vi erklærer med dette at dette produktet er konformt med følgende direktiv og normer.
DA Vi erklærer hermed, at produktet er i overensstemmelse med følgende direktiver og standarder.

Product type - Producttype - Produkttyp - Type de produit - Produkttyp - Produkttype - Produkttype
Turnstile - Tourniquet - Drehkreuz - Tourniquet - Rotationsgrind - Rotasjonsgrind - Drejekors

Identification code - Identificatiecode - Kenncode - Code d'identification - Identifikationskod - Identifikasjonskode -Identifikationskode
B700

Contact address manufacturer - Contactgegevens fabrikant - Kontaktanschrift des Herstellers - Adresse de contact du fabricant - Tillverkarens kontaktadress - Tillverkarens kontaktadress - Kontaktadresse fabrikant
Heras B.V. - Hekdam 1 - 5688JE Oirschot – Netherlands Heras U.K. - Herons Way - Doncaster, DN4 8WA South Yorkshire - UK

Directives - Richtlijnen - Richtlinien - Directives - Direktiven - Direktiver - Direktiver
2014/30/EU EMC Directive 2014/35/EU Low voltage directive

Standards - Normen - Normen - Normes - Standarder - Standarder - Standarder
BS 7671:2008+A: 2011+A2:2013+A3:2015 EN-IEC 61439-1:2011

Signed by Ondertekend door Unterzeichnet von Signé par Undertecknad av Undertegnet av Underskrevet af	Gilles Rabot Chief Executive Officer Oirschot 27-05-2021

Declaration of Conformity

Verklaring van overeenstemming - Konformitätserklärung - Déclaration de conformité - Deklaration om överensstämmelse - Konformitetserklæring - Overensstemmelseserklæringen

DoC No: UKCA-DOC-2021.08-00

EN We herewith declare that the product complies with the following directives and standards.
NL Hiermee verklaren wij dat het product in overeenstemming is met de volgende richtlijnen en normen.
DE Hiermit erklären wir, dass die Produkte der nachfolgenden Richtlinien und Normen entspricht.
FR Par la présente nous déclarons que le produit est conforme aux directives et normes suivantes.
SV Vi deklarerar härmed att produkten överensstämmer med följande riktlinjer och normer.
NO Vi erklærer med dette at dette produktet er konformt med følgende direktiv og normer.
DA Vi erklærer hermed, at produktet er i overensstemmelse med følgende direktiver og standarder.

Product type - Producttype - Produkttyp - Type de produit - Produkttyp - Produkttype - Produkttype
Turnstile - Tourniquet - Drehkreuz - Tourniquet - Rotationsgrind - Rotasjonsgrind - Drejekors

Identification code - Identificatiecode - Kenncode - Code d'identification - Identifikationskod - Identifikasjonskode -Identifikationskode
B700

Contact address manufacturer - Contactgegevens fabrikant - Kontaktanschrift des Herstellers - Adresse de contact du fabricant - Tillverkarens kontaktadress - Tillverkarens kontaktadress - Kontaktadresse fabrikant
Heras B.V. - Hekdam 1 - 5688JE Oirschot – Netherlands Heras U.K. - Herons Way - Doncaster, DN4 8WA South Yorkshire - UK

Directives - Richtlijnen - Richtlinien - Directives - Direktiven - Direktiver - Direktiver
Electromagnetic Compatibility Regulations 2016 Low Voltage Electrical Equipment (Safety) Regulations 1989

Standards - Normen - Normen - Normes - Standarder - Standarder - Standarder
BS 7671:2008+A: 2011+A2:2013+A3:2015 EN-IEC 61439-1:2011

Signed by Ondertekend door Unterzeichnet von Signé par Undertecknad av Undertegnet av Underskrevet af	Gilles Rabot Chief Executive Officer Oirschot 27-05-2021

Heras B.V.
Hekdam 1
P.O. box 30
5688 ZG Oirschot

Tel: +31 499 55 12 55
E-mail: infoNL@heras.nl

Local supplier stamp:

Type: B700

Group: B700 Turnstile

Version no: 2.0

Language: en_EN

Rev. date:	03-05-2022	**Type:**	B700	**Project name**	dr-unit diverse			**Page title:**	**Page**
Version no:	2.0								
Drawn by:	WWI	**Language:**	en_EN	**Group code**	B700	**Description**	Tourniquet	Title Sheet / Front Sheet	1 / 12

Contents

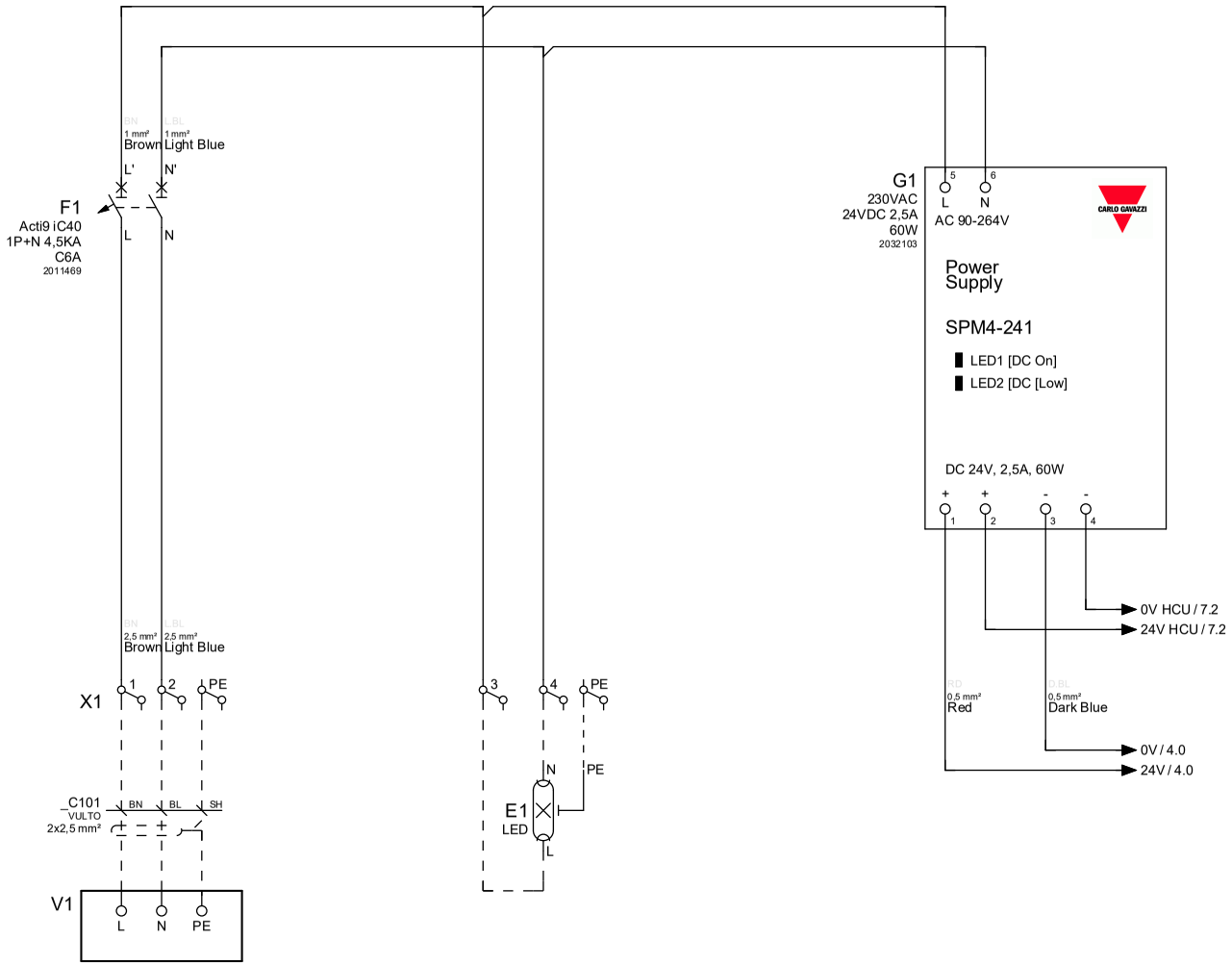

Voltage in

LED-lighting

Power supply
24V/2.5A

Rev. date:	03-05-2022	**Type:**	B700	**Project name**	dr-unit diverse			**Page title:**	**Page**
Version no:	2.0								
Drawn by:	WWI	**Language:**	en_EN	**Group code**	B700	**Description**	Tourniquet	Voltage	3 / 12

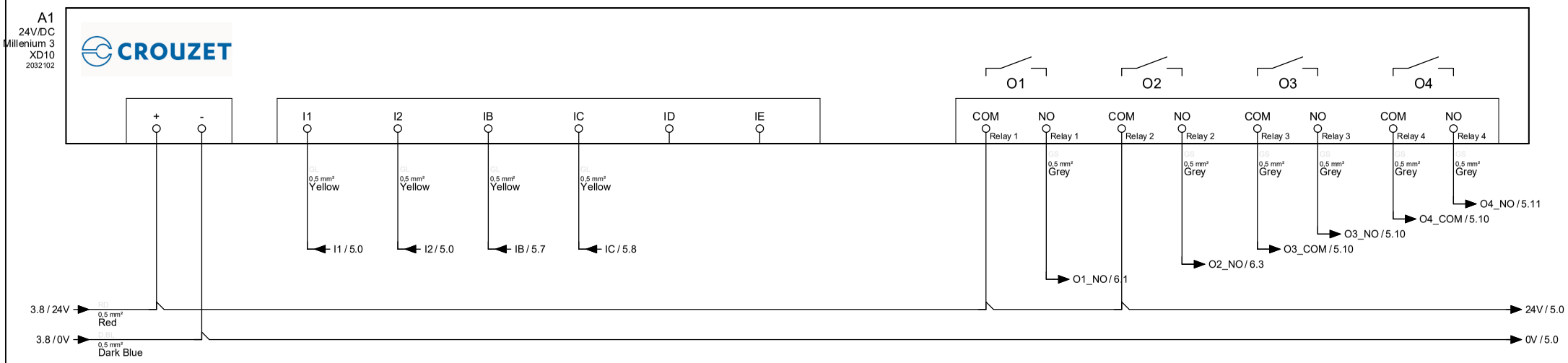

Rev. date:	03-05-2022	**Type:**	B700	**Project name**	dr-unit diverse			**Page title:**	**Page**
Version no:	2.0								
Drawn by:	WWI	**Language:**	en_EN	**Group code**	B700	**Description**	Tourniquet	Millenium 3 XD10	4 / 12

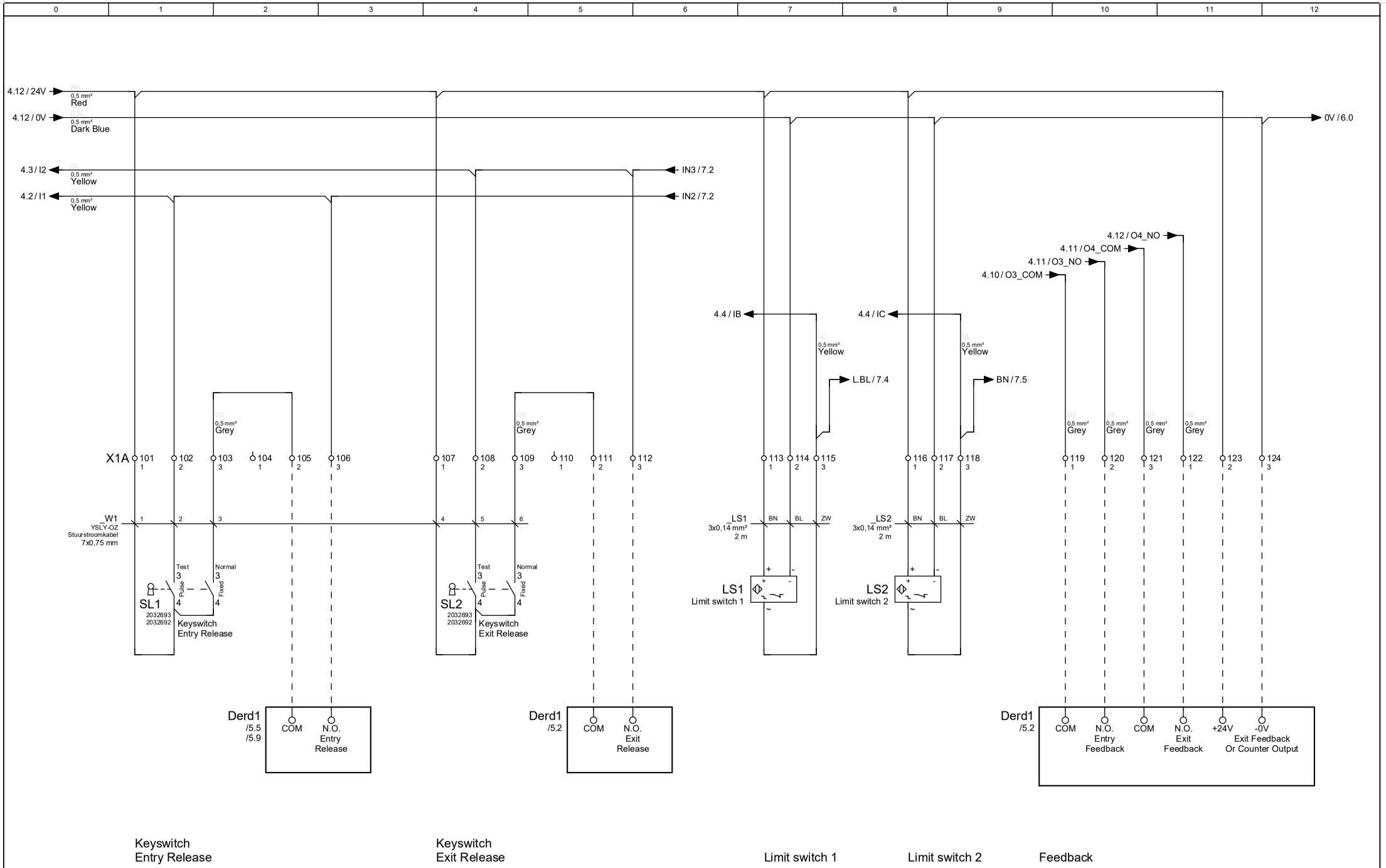

Rev. date:	03-05-2022	**Type:**	B700	**Project name**	dr-unit diverse			**Page title:**	**Page**
Version no:	2.0								
Drawn by:	WWI	**Language:**	en_EN	**Group code**	B700	**Description**	Tourniquet	Various controls	5 / 12

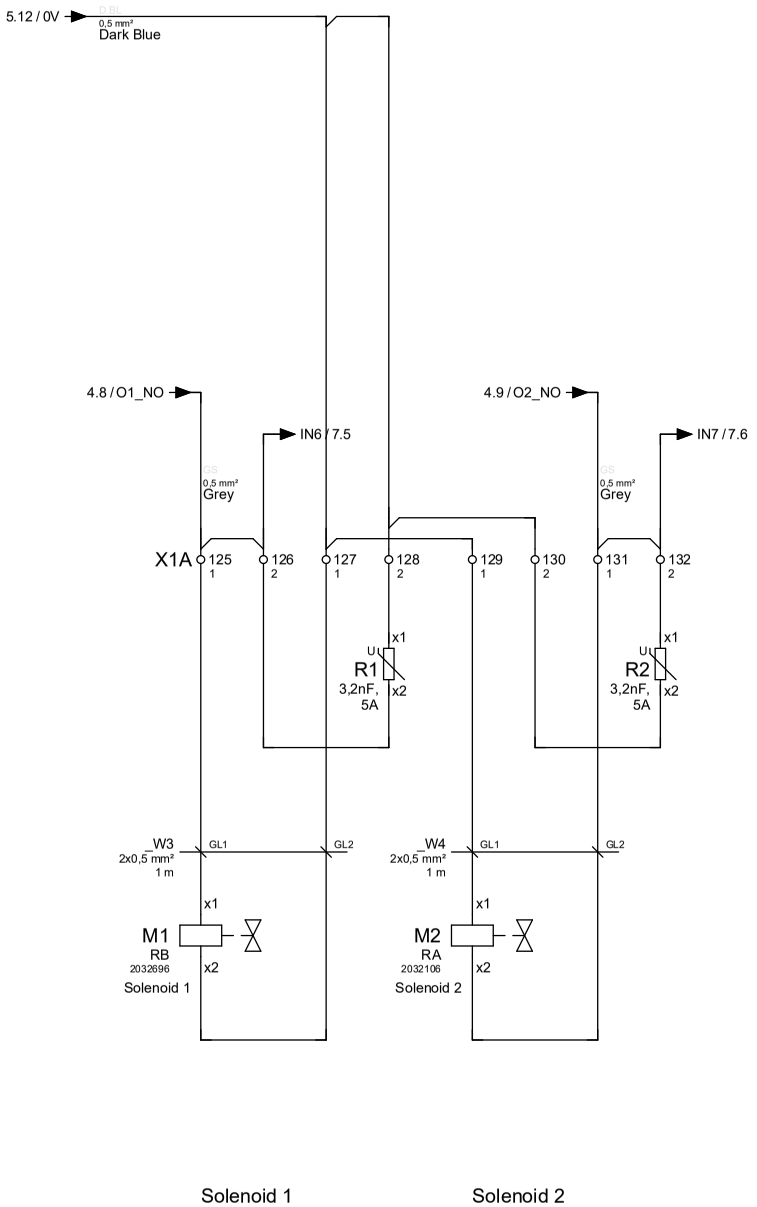

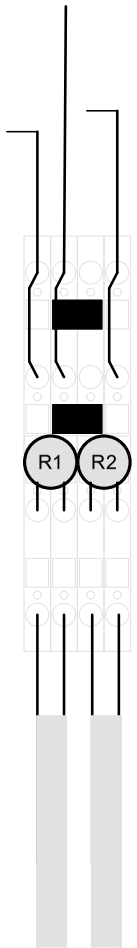

Solenoid 1 Solenoid 2

Rev. date:	03-05-2022	**Type:**	B700	**Project name**	dr-unit diverse			**Page title:**	**Page**
Version no:	2.0								
Drawn by:	WWI	**Language:**	en_EN	**Group code**	B700	**Description**	Tourniquet	Solenoids	6 / 12

Eplan version: 2.9.4

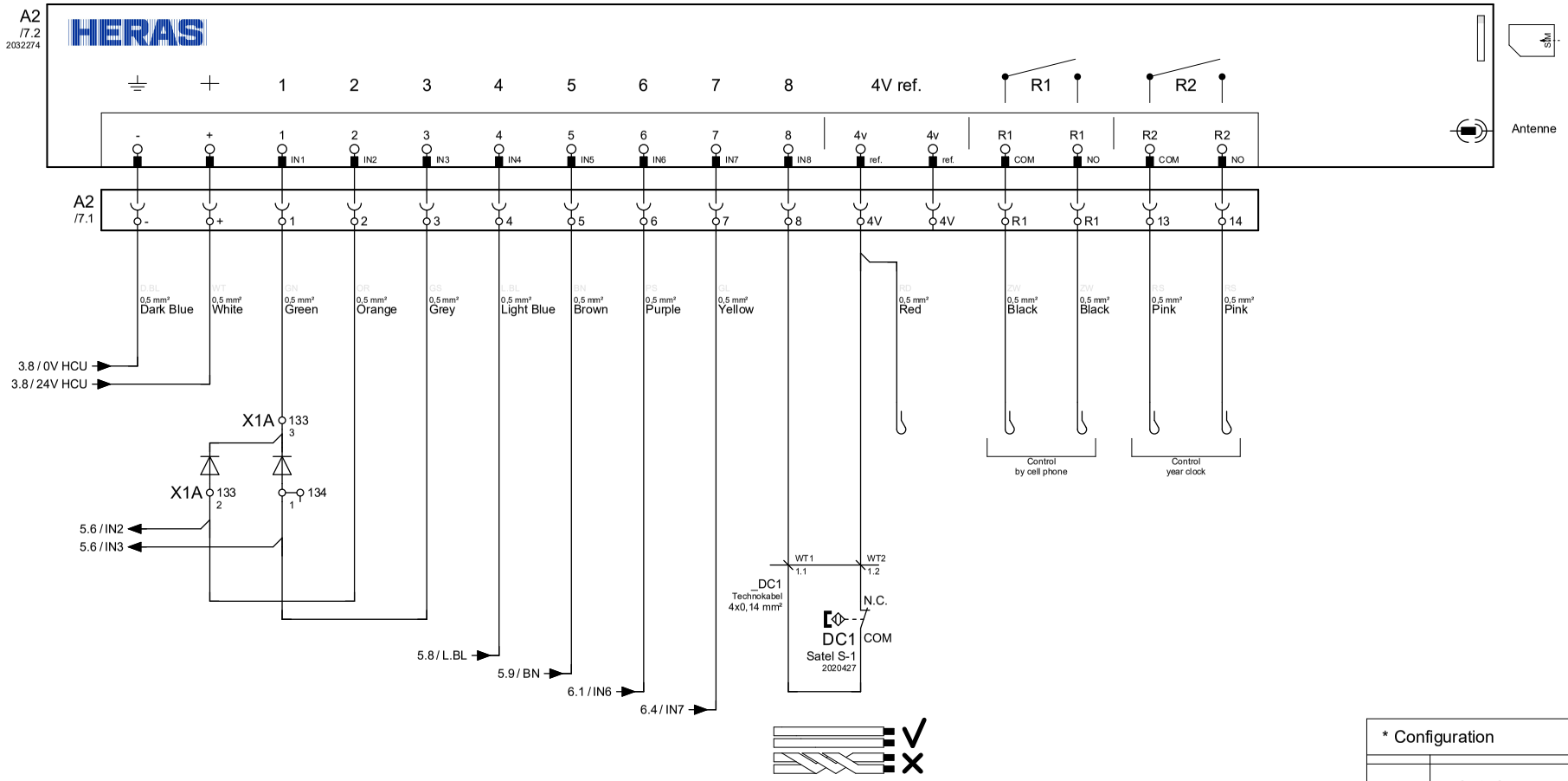

* Configuration	
1	Cycle Counter
2	Entry Release
3	Exit Release
4	Limit switch 1
5	Limit switch 2
6	Solenoid 1
7	Solenoid 2
8	Notification lid open

Rev. date: 03-05-2022	**Type:** B700	**Project name** dr-unit diverse			**Page title:**		**Page**
Version no: 2.0							
Drawn by: WWI	**Language:** en_EN	**Group code** B700	**Description** Tourniquet		Heras Cloud unit		7 / 12

Eplan version: 2.9.4

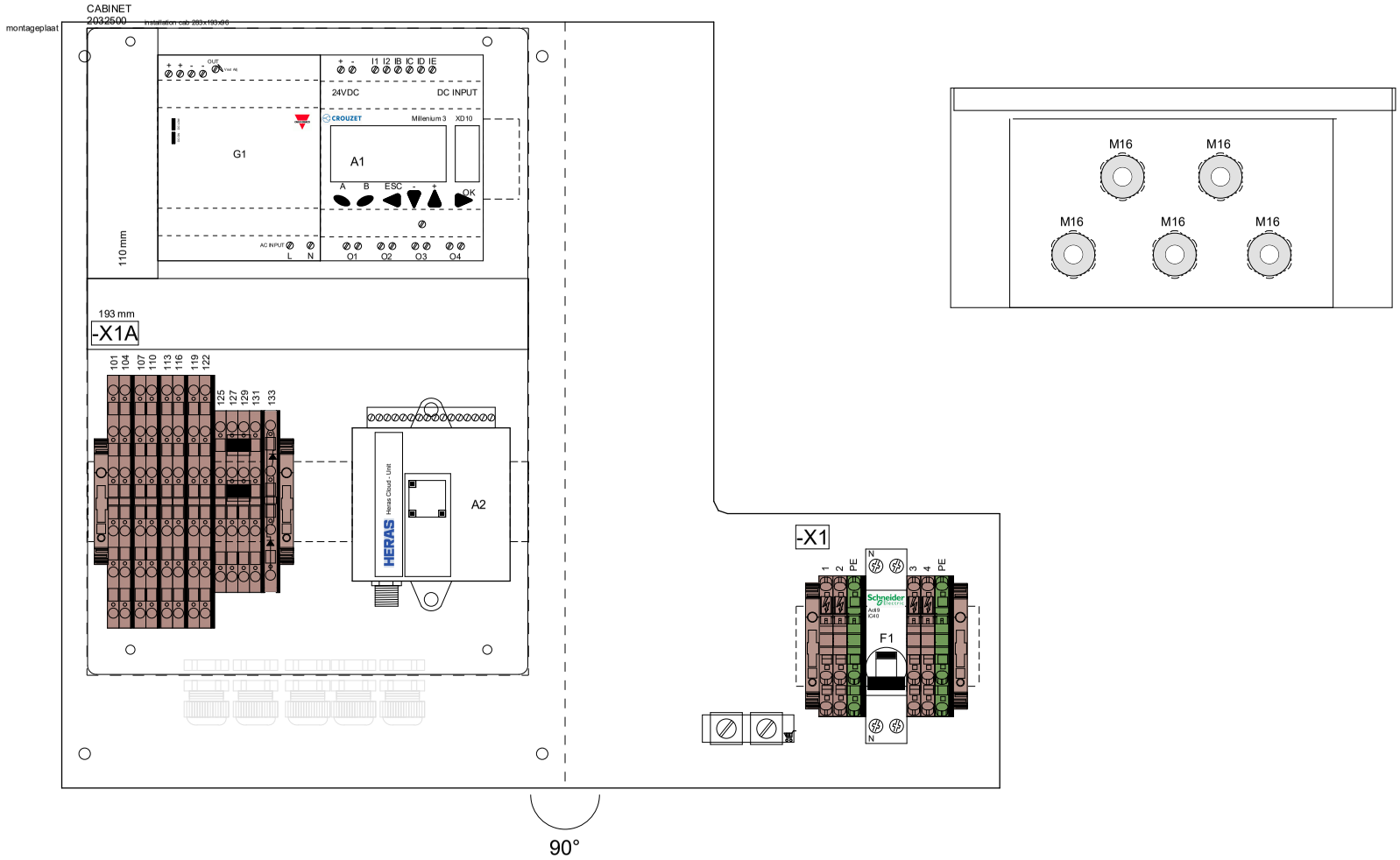

Rev. date:	03-05-2022	**Type:**	B700	**Project name**	dr-unit diverse			**Page title:**	**Page**
Version no:	2.0								
Drawn by:	WWI	**Language:**	en_EN	**Group code**	B700	**Description**	Tourniquet	View	8 / 12

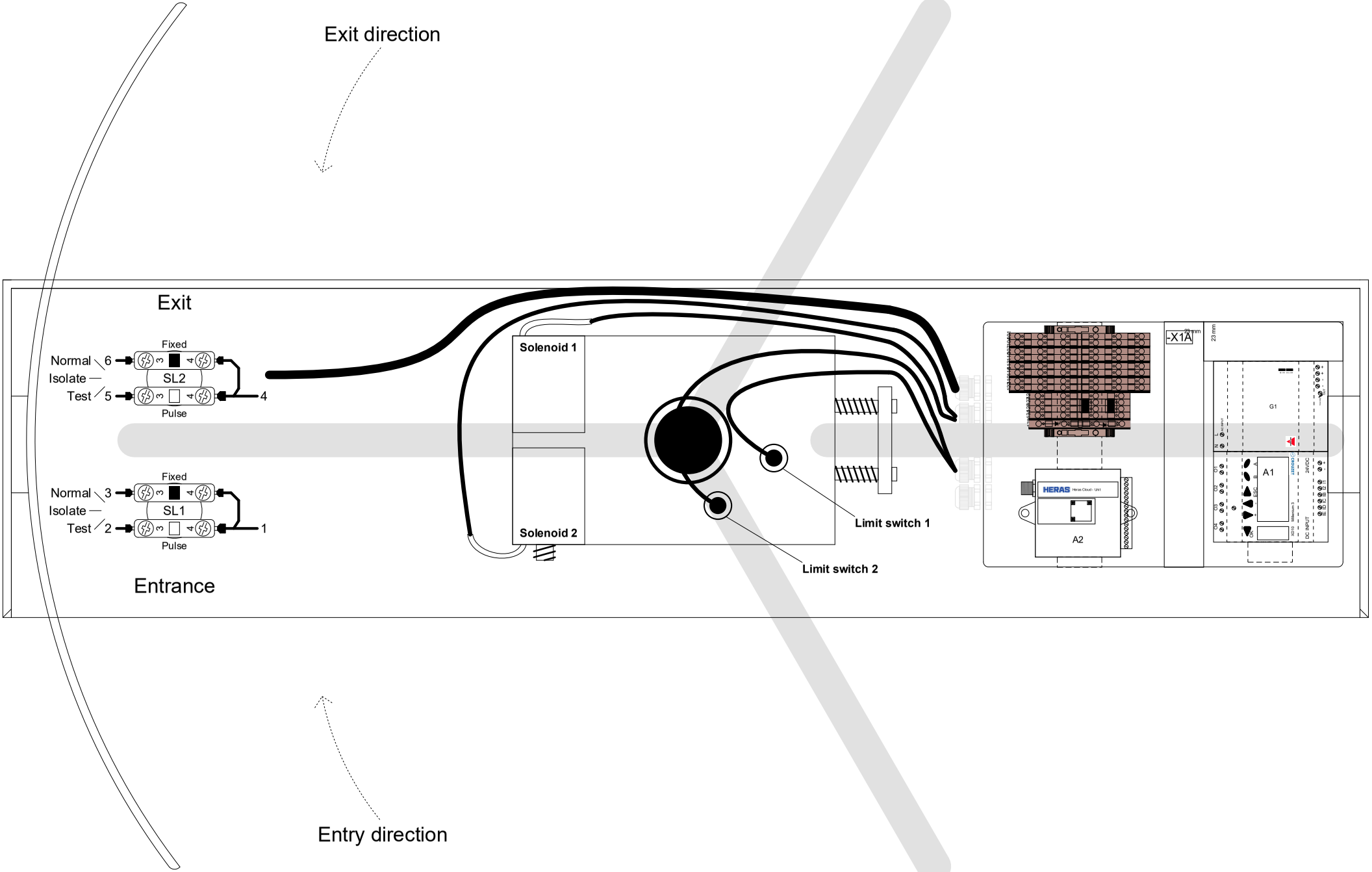

Rev. date:	03-05-2022	**Type:**	B700	**Project name**	dr-unit diverse			**Page title:**	**Page**
Version no:	2.0								
Drawn by:	WWI	**Language:**	en_EN	**Group code**	B700	**Description**	Tourniquet	Top view	9 / 12

Eplan version: 2.9.4

Industrialization_klemmenaansluitlijst_Voorwaardelijk

Terminals connection list

X1

From	Connection code	Function text	Cable No.	Cable Type.	Cable Wire	Bridge	Level	Bridge	Page
Voltage in	-V1:L	Voltage in	_C101	2x2,5 mm²	BN	'	1	'	=B700+B700/3
=	-V1:N		_C101	2x2,5 mm²	BL	'	2	'	=B700+B700/3
Voltage in	-V1:PE		_C101	2x2,5 mm²	SH	'	PE	'	=B700+B700/3
LED-lighting	-E1:L	LED				'	3	'	=B700+B700/3
=	-E1:N	=				'	4	'	=B700+B700/3
LED-lighting	-E1:PE	LED				'	PE	'	=B700+B700/3

Terminals connection list

X1A

From	Connection code	Function text	Cable No.	Cable Type.	Cable Wire	Bridge	Level		Bridge	Page
Keyswitch Entry Release	-SL1:4	Keyswitch Entry Release	_W1	7x0,75 mm	1		1	101		=B700+B700/5
Keyswitch Entry Release	-SL1:3	Keyswitch Entry Release	_W1	7x0,75 mm	2		2	102		=B700+B700/5
Keyswitch Entry Release	-SL1:3	Keyswitch Entry Release	_W1	7x0,75 mm	3		3	103		=B700+B700/5
Keyswitch Entry Release							1	104		=B700+B700/5
Keyswitch Entry Release	-Derd1:COM						2	105		=B700+B700/5
Keyswitch Entry Release	-Derd1:N.O.	Entry Release					3	106		=B700+B700/5
Keyswitch Exit Release	-SL2:4	Keyswitch Exit Release	_W1	7x0,75 mm	4		1	107		=B700+B700/5
Keyswitch Exit Release	-SL2:3	Keyswitch Exit Release	_W1	7x0,75 mm	5		2	108		=B700+B700/5
Keyswitch Exit Release	-SL2:3	Keyswitch Exit Release	_W1	7x0,75 mm	6		3	109		=B700+B700/5
Keyswitch Exit Release							1	110		=B700+B700/5
Keyswitch Exit Release	-Derd1:COM						2	111		=B700+B700/5
Keyswitch Exit Release	-Derd1:N.O.	Exit Release					3	112		=B700+B700/5
Limit switch 1	-LS1:+	Limit switch 1	_LS1	3x0,14 mm²	BN		1	113		=B700+B700/5
Limit switch 1	-LS1:-	Limit switch 1	_LS1	3x0,14 mm²	BL		2	114		=B700+B700/5
Limit switch 1	-LS1:~	Limit switch 1	_LS1	3x0,14 mm²	ZW		3	115		=B700+B700/5
Limit switch 2	-LS2:+	Limit switch 2	_LS2	3x0,14 mm²	BN		1	116		=B700+B700/5
Limit switch 2	-LS2:-	Limit switch 2	_LS2	3x0,14 mm²	BL		2	117		=B700+B700/5
Feedback	-LS2:~	Limit switch 2	_LS2	3x0,14 mm²	ZW		3	118		=B700+B700/5
Feedback	-Derd1:COM						1	119		=B700+B700/5
Feedback	-Derd1:N.O.	Entry Feedback					2	120		=B700+B700/5
Feedback	-Derd1:COM						3	121		=B700+B700/5
Feedback	-Derd1:N.O.	Exit Feedback					1	122		=B700+B700/5
Feedback	-Derd1:+24V						2	123		=B700+B700/5
Feedback	-Derd1:-0V	Exit Feedback Or Counter Output					3	124		=B700+B700/5
Solenoid 1	-M1:x1	Solenoid 1	_W3	2x0,5 mm²	GL1		1	125		=B700+B700/6
Solenoid 1	-R1:x2	Solenoid 2					2	126		=B700+B700/6
Solenoid 2	-M1:x2	Solenoid 1	_W3	2x0,5 mm²	GL2		1	127		=B700+B700/6
Solenoid 2	-R1:x1	Solenoid 2					2	128		=B700+B700/6
Solenoid 2	-M2:x1	Solenoid 2	_W4	2x0,5 mm²	GL1		1	129		=B700+B700/6
Solenoid 2	-R2:x2						2	130		=B700+B700/6

Industrialization_klemmenaansluitlijst_Voorwaardelijk

Terminals connection list

X1A

From	Connection code	Function text	Cable No.	Cable Type.	Cable Wire	Bridge	Level		Bridge	Page
Solenoid 2	-M2:x2	Solenoid 2	_W4	2x0,5 mm²	GL2	'	1	131	'	=B700+B700/6
Solenoid 2	-R2:x1					'	2	132	'	=B700+B700/6
	-A2:1				GN	'	3	133	'	=B700+B700/7
						'	2	133	'	=B700+B700/7
	-A2:3				GS		1	134		=B700+B700/7

Rev. date: 03-05-2022 **Version no:** 2.0 **Drawn by:** WWI	**Type:** B700 **Language:** en_EN	**Project name** dr-unit diverse **Group code** B700	**Description** Tourniquet	**Page title:** "+B700-X1A" Terminals Connection frame	HERAS	**Page** 12 / 12