User Manual

sGate top guided
sGate Trackless
sGate Trackless – single leaf

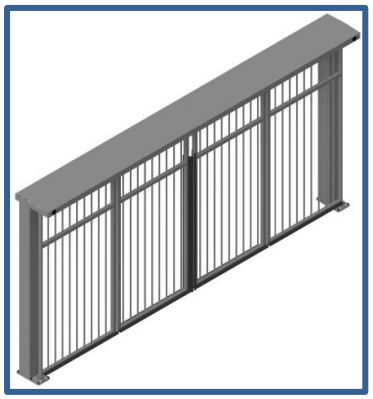

Please read this original user manual before using this gate for the first time! Act in accordance with the manual and keep it in a safe place for later use or for the following owner.

EN – Translation of the original user manual - 3.4 | 2022

CONTENTS

FOREWORD

This manual enables you to operate and maintain the gate correctly. Possible options are briefly described. The Operation chapter explains the control unit. Among other things, it describes how you can change various settings. The Maintenance chapter is extremely important to ensure that you can continue to operate your gate problem free in the long term.

Please read this user manual carefully before using the gate.

Store the manual in a safe place to be able to refer to it later if required. This description is intended for the operator of the gate. The installer uses a separate manual to assemble and install the gate.

The installer uses an installation scheme for the drive concerned and works according to the applicable standards. In the event of a fault, you should contact a Heras certified technician. A connection diagram can be found at the end of this document.

1 PREFACE

1.1 MANUFACTURER / SUPPLIER

Manufacturer: Heras B.V.
Hekdam 1, 5688 JE Oirschot
Netherlands
Tel.: +31(0)499-551255
www.heras.com

Technical Construction File: Heras B.V. manager, PD Department

1.2 SERVICE / MAINTENANCE

In the event of problems, failures or questions you can contact:

Heras Netherlands	Telephone	+31(0) 499 551 255
Heras Germany	Telephone	+49 (0)1805 437277
Heras England	Telephone	+44(0) 1302 364 551
Heras France	Telephone	+33(0) 3 88 067 000
Heras Norway	Telephone	+47(-) 22 900 555
Heras Sweden	Telephone	+46(0) 77 1506050

1.3 DEFINITIONS: USER / OPERATOR / ENGINEER

User: Anyone using the gate.

Operator: A user who is familiar with all safety aspects dealt with in this manual. Operators are not allowed to carry out any installation work on the gate unless explicitly specified.

Engineer: The engineer is a Heras fitter (or an engineer employed by the customer who has been given explicit permission in writing from Heras) who is qualified to perform technical interventions on the gate.

1.4 PRESCRIBED USE / APPLICATION

Only the correct installation and maintenance by an authorised/qualified company or person in agreement with the user manual, logbook, checklists and maintenance lists can ensure the safe operation of the system.

A qualified person is, according to EN 12604 and EN 12453, a person who has the required training, qualified knowledge and practical experience required to install, test and maintain a gate system correctly and safely.

1.5 CONFORMITY WITH EUROPEAN DIRECTIVES

The installation complies with the following EU Directives/ regulations:

EU	2006/42/	EC	Machine Directive
EU	2014/30	EU	EMC Directive (electromagnetic compatibility)
EU	305/2011	EC	Construction Product Regulation

UK	Supply of Machinery (Safety) Regulations 2008
UK	Electromagnetic Compatibility Regulations 2016
UK	Construction Products Regulations 2013

The design and production has been executed compliant with the applicable product standard EN 13241 and EN 12453.

A Declaration of Performance (DoP) and Declaration of Conformity (DoC) are obligatory for this product. The DoP and DoC are included in Appendix A.

The CE or UKCA mark is located on the left column of the gate.

1.6 DELIVERY

The gate and the gate drive and control unit must be installed, connected, set up and tuned by a fitter or an engineer who also connects and programs any accessories.

The gate control unit is adjusted to the options/accessories agreed with the user. The relevant options are laid down during hand-over.

Of course, you can add optional/accessories afterwards. Contact your supplier for

this.

Gates are always delivered fully tested.

1.7 GENERAL INFORMATION REGARDING THE ELECTRICAL CONNECTIONS

Electrical connections must be made compliant with the supplied wiring diagram.

It is important that the system is correctly earthed (Protective grounding in accordance with DIN VDE).

Because EMC-related suppression components can leak current to the earth cable, it is advisable that you do not protect the control unit with a Residual Current Device. When switching on the system, a high starting current can be generated due to the charging of the intermediate circuit.

If after measurement during commissioning it appears that the leakage current exceeds the permitted 3.5 mA, an additional grounding, in accordance with EN 60335-1 and IEC 30364-5-54, must be provided. Measurement is made according to EN 60335-2-103. Consult your installer for this.

Take into account good shielding, for example an automatic circuit breaker 16A B characteristic.

Ensure that the feeder cables are not carrying power during commissioning.

1.8 DELIVERY OF GATE

After installation and commissioning, by a Heras technician or a technician trained by Heras, the cover of the drive unit must be closed. This is done to prevent unauthorised access.

2 SAFETY

2.1 EXPLANATION OF THE SYMBOLS

Caution: To prevent personal injury, you must observe the safety instructions below.

Note: To prevent material damage, you must observe the safety instructions below.

Information: This is followed by further information or by a reference to other documents.

Warning: Risk of limbs getting crushed

2.2 SAFETY DISTANCES

Safety distances apply for the area into which the gate slides in accordance with EN 12453 for electrically driven gates.

2.3 GENERAL SAFETY INSTRUCTIONS

- The operator must read the entire user manual before the gate is used for the first time. The instructions stated in the user manual must be observed and complied with. All other forms of use can cause unexpected hazards and are forbidden.
- It is forbidden to apply the drive unit to gates other than those stated in this manual, without Heras' permission.
- Applying a third-party drive unit and/or safety edge will affect safety and will invalidate the CE mark and UKCA mark.
- The gate must only be put into use if all safety facilities are in place and connected, and work properly.
- All faults which might present a source of danger to the user or to third persons must be eliminated immediately.
- All warnings and safety notices on the equipment must be in place and clearly legible at all times.
- Closing the gate infill openings in any way, such as by means of banners,

advertising signs etc, is not allowed as this may negatively affect the safe operation of the gate.

- All alterations or extensions to the gate must be carried out by qualified personnel using parts which the manufacturer has defined as suitable for such alterations or extensions. Any failure to comply with these instructions will be considered as non-compliant behavior and will invalidate the manufacturer's guarantee, as a result of which the risk entirely transfers to the user.
- Improper usage or servicing or ignoring the operating instructions can be a source of danger for persons, and/or result in material damage.
- If the meaning of any part of these installation and operating instructions is not clear, then please contact your supplier before you use the equipment.
- This manual must always be available at the operating location of the drive unit/gate. This manual must be thoroughly read and applied by all persons who are in charge of operating, maintaining and repairing the drive unit.

2.4 SAFETY PROVISIONS EMPLOYED

- To protect people and goods from injury or damage, the gate is fitted with safety provisions including safety edges and/or photocells.
  These serve as emergency provisions that immediately stop and reverse the movement of the gate. It is forbidden to use these provisions to stop the gate normally.
- For a gate with hold-to-run control, the above-mentioned safety provisions are not necessary and will therefore not be standard provisions.
  With this type of operation, the gate stops immediately as soon as the switch is released.

2.5 INTENDED USE

Giving safe access for goods and vehicles accompanied or driven by persons in industrial, commercial or residential premises.

2.6 SAFETY DURING USE

Children or people with a disability must not operate the gate. Parents must supervise their children to prevent them playing with the gate.

➔ PARENTS ARE RESPONSIBLE FOR THEIR CHILDREN ←

- Keep a safe distance from the moving gate. Warning icons to this effect have been installed in various locations.
- Only pass through the gate when it is completely open.
- The gate must not be operated in windy conditions, wind force ≥9 Beaufort. The gate leaf can swing in a way that can result in damage to the construction.
- The safety edges serve as emergency facilities to immediately stop and reverse the gate movement. Using them as a regular gate stop feature is not allowed. Since the head stiles of the gate have safety edges that cannot cover their full height, there is still some risk of people getting trapped by the gate here.
- When hold-to-run-control is employed, the gate must only be operated if it can be seen completely, directly and in real-time. Operation must be via a permanently installed operating device, for instance a key switch or push button. This operating device must be located in such a way that the operator's position is safe. The gate must stop immediately when the button or key is released. Other operating devices are not allowed.
- The gate must be able to move freely without there being obstacles in the gate opening passage or anywhere else on the moving trajectory of the gate. Do not stick any objects through, over or under the gate which might block the gate.
- The guide rail of the gate must always be free of snow, ice or contaminants that may affect the sliding behaviour. In the event of frost, check this before commissioning the gate. If the running surface is blocked, the gate will not move at all or will not complete its movement. An irregular running surface may cause damage to the drive and/or road wheels.
- Climbing the gate is strictly forbidden as people climbing the gate could be hurt if the gate is started unexpectedly.
- Always close the access doors during use.

2.7 SAFETY DURING INSTALLATION, MAINTENANCE AND DISASSEMBLY

- When work is carried out, manual operation or while cleaning the gate, the power supply to the system must be switched off and it must be ensured that it cannot be switched on unexpectedly.
- The EN 12453 standard must be taken into consideration during installation and maintenance. To achieve a good safety level, the above standard and the national regulations must be taken into account in non-EC countries.

3 OPERATION

3.1 OPENING/CLOSING GATE - NORMAL USE

The gate can be operated using pulse operation, for instance via a button or key switch. The location of the operating device depends on the customer's choice or the operating mode.

- OPEN:
  Press the “Open” button. The gate slides open to the next end position. This can be completely or partially open (if the “Partially open” function has been programmed).
- CLOSE:
  Press the "Close" button. The gate closes completely.
- STOP:
  Press the "Stop" button. The gate will stop immediately, irrespective of its direction of travel. To restart the gate press “Open” or "Close".

3.2 OPEN /CLOSE MANUALLY

In emergencies or power outages, the gate can also be disconnected from the drive unit. This requires the column to be opened. The actions described below must be performed in one or both columns, depending on the gate type.

3.2.1 Unlock the motor/gate

- Unlock the bottom cover.
- Remove the cover.
- Pull the cord down and hang it in the bracket.
  The motor brake is released and the gate can be operated manually.
- Close the cover again.

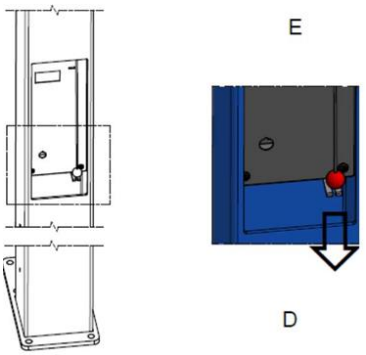

Figure 1: disconnecting the motor

3.2.2 Connect the motor/gate

- Unlock the bottom cover.
- Remove the cover.
- Remove the cord from the bracket and release it.
  The motor brake is connected again and locks the gate.
- Close the cover again. The gate can once again be operated electrically.

4 DESCRIPTION

4.1 SGATE TOP GUIDED

The sGate with top guide rails is a gate with a modular structure for passages with a width of approx. 6 meters wide and a headroom of up to approx. 4 meters.

Applications include port areas, company buildings, office buildings, storage sites, garden and landscape areas, high-risk sites, airports, transport and distribution sites, and parking garages.

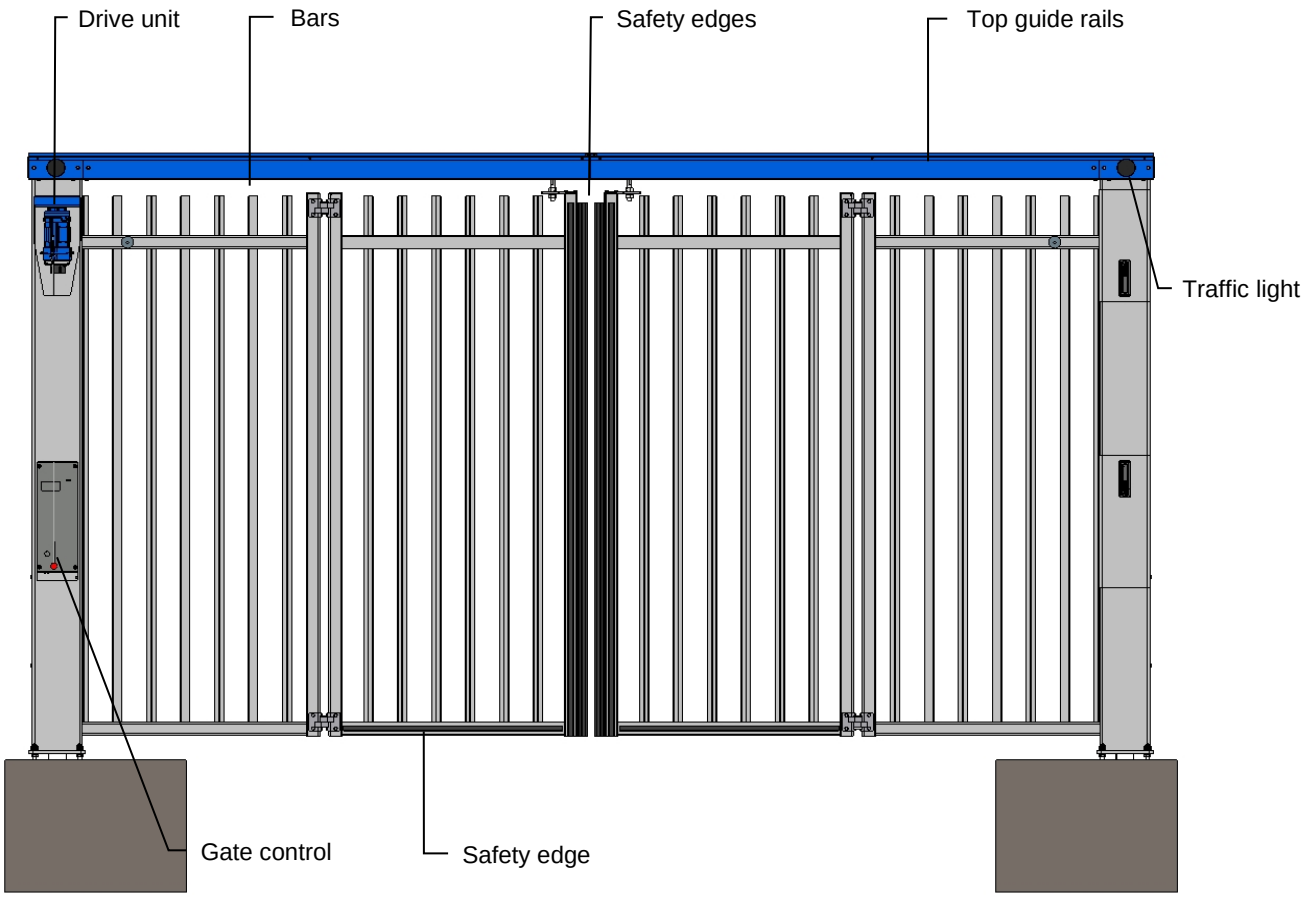

Figure 2: sGate top guided terms

4.2 SGATE TRACKLESS

The sGate Trackless with rod drive is a fully assembled gate for passages with a width of up to approx. 8 meters.

Applications include port areas, company buildings, office buildings, storage sites, garden and landscape areas, high-risk sites, airports, transport and distribution sites, and parking garages.

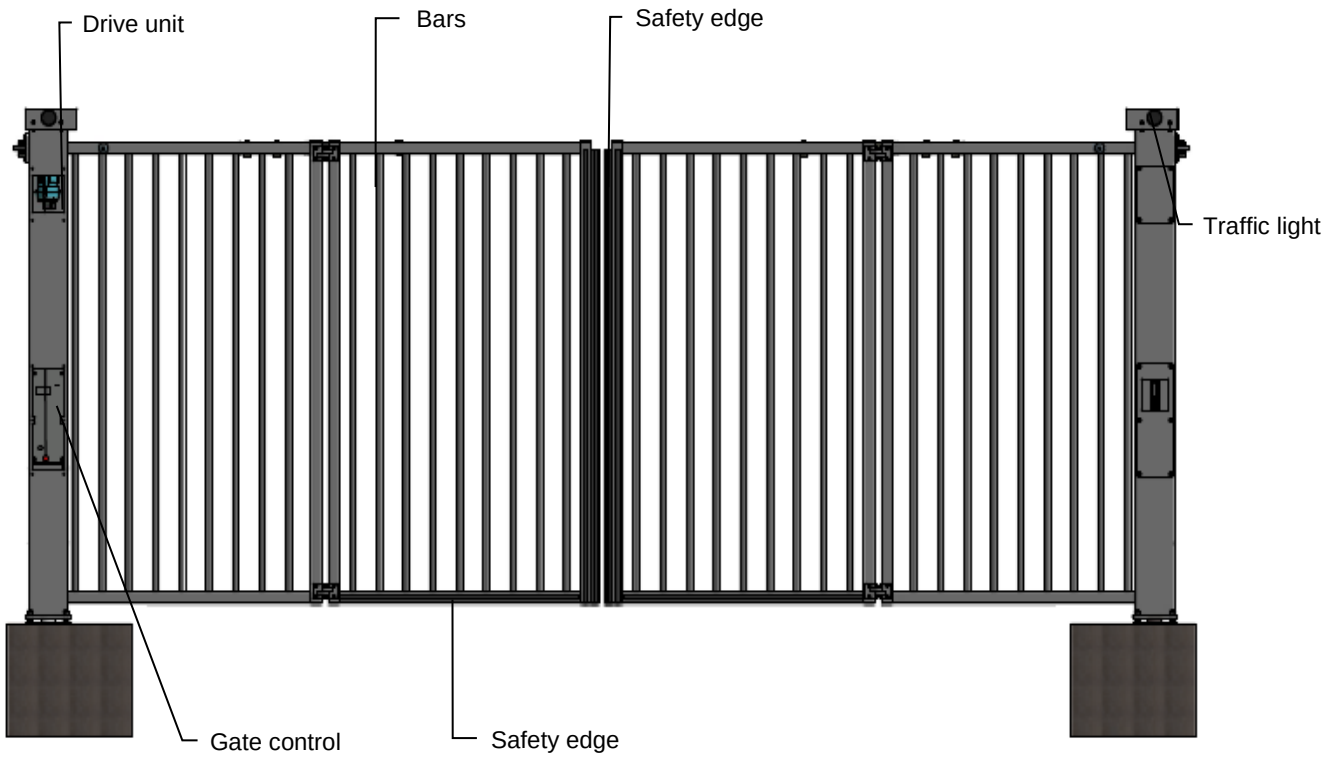

Figure 3: sGate Trackless terms

4.3 SGATE TRACKLESS SINGLE LEAF

The sGate Trackless single leaf with rod drive is a fully assembled gate for passages of 3, 3,5 and 4 meters wide.

Applications include port areas, company buildings, office buildings, storage sites, garden and landscape areas, high-risk sites, airports, transport and distribution sites, and parking garages.

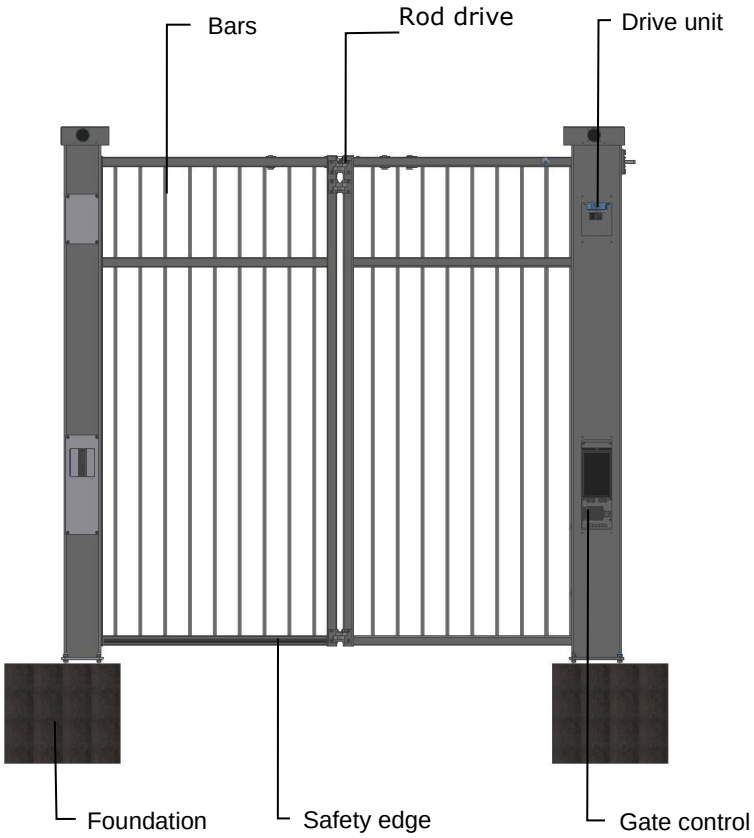

Figure 4: sGate Trackless single leaf terms

4.4 SAFETY EDGES

Power operated Heras gates are protected by safety edges. The type of device and the speed of movement depend on the motor control unit used. If the safety device touches an obstacle, the gate will immediately stop and reverse. Dependent on the device, the gate will restart. The safety edges have been fitted to the stationary and/or moving part or parts of the gate. They are not required for hold-to-run-control. These strips serve as safety components.

Before the gate is moved, the control system checks the status of the safety edges. If one of the safety edges is faulty, the gate can only be opened and closed in hold-to-run-mode. In that case, consult a qualified engineer.

See the chapter 1.2 “SERVICE /MAINTENANCE”

4.5 PHOTOCELLS

Photocells detect whether there are obstacles in the path taken by the gate. If an obstacle is detected during the opening or closing movement, the gate will stop immediately. The photocell is active during closing and opening of the gate. Gates are fitted with multiple photocells.

4.6 LOOP DETECTION

The detection loops are designed to detect vehicles. The opening movement will be stopped by the control when the trapezoidal loop, which lies on the side where the leafs rotate, is energised. If you are on top of this loop while the gate is closed, it will not open. When the loop is released, the gate will (continue to) open.
The closing movement will be stopped by the control when the trapezoidal loop is energised. When the loop is released again, the gate will close further.
The opening movement will have no influence on the movement when the rectangular loop, which lies on the other side, is energised. The closing movement will be stopped by the control when the rectangular loop is energised. When the loop is released the gate will close further.

4.7 TRAFFIC LIGHTS

The gate can be equipped with traffic lights on both sides. These are clearly visible

on the top of columns. The traffic lights indicate a red cross or green arrow with which priority can be given to each direction.

Depending on the chosen operation, a green arrow will light up on one side while a red cross lights up on the other side. It is also possible that both directions get a green arrow, for example, when using the pedestrian passage.

5 FAULTS

5.1 DEFECTIVE PHOTOCELL OR SAFETY EDGE

If a photocell or safety device is defective, the gate can only be opened and closed using the hold-to-run switch. In this case, consult a qualified technician.

See chapter “SERVICE / MAINTENANCE”

6 EMERGENCY STOP

The gate is not equipped with an emergency stop system. According to the Machine Directive 2006/42/EC, annex 1, article 1.2.4.3., this is not necessary if the emergency stop system would not lower the risk. However, an emergency stop system can be connected to the control unit.

7 MAINTENANCE INSTRUCTIONS

- When working on the gate or cleaning it, the power supply to the system must be switched off and protected from unauthorized switching on.
- If the gate must be moved manually, first turn the system circuit breaker in the motor cabinet to the "off" position and protect it from being switched on (e.g. by locking the cabinet).

7.1 GATE MAINTENANCE

Under normal conditions and with regular maintenance, folding gates have a life of at least 600,000 cycles. To ensure that your gate operates safely, reliably and in compliance with all relevant legislation and laws, we recommend a MINIMUM of one maintenance check every 6 months or after 50,000 operating cycles, whichever is the sooner. However, to ensure safety and proper operation of the gate, more frequent maintenance checks are recommended during the lifetime of the gate.
Any maintenance work, including repair, replacement, modification and upgrade MUST be conducted by a Heras trained, qualified, competent and certified technician using Heras approved tools and spare parts.
Failure to ensure that the gate is used in accordance with User manual provided, or any faults or damage caused by wilful misuse, will result in any warranty becoming void.

During maintenance, essential points of the gate must be periodically checked based on an inspection protocol:

- Correct operations and adjustment.
- Check all anchor and bolted connections.
- Check for wear of the guide wheels and the running surface/groove
- Check welded joints, damage to coating and zinc
- Check for damage and the operation of detection loops, safety edges and photocells.

7.2 CLEANING

The gate and the outside of the drive unit cabinet can be cleaned using a non-aggressive detergent and a soft cloth, brush or sponge. Avoid using a pressure cleaner as this might damage the gate and the drive unit.

8 DECOMMISSIONING AND REMOVAL

Ensure that the gate is dismantled by a qualified technician.
Disconnect the electricity supply in a safe way from the drive unit.
Use the installation manual.

At the end of their service lives the products must be disposed of in accordance with all local, regional and national rules and instructions. The guideposts are made of steel. Heras is also happy to take the products back and then dispose of them in

an appropriate manner.

9 SPARE PARTS

If you have any questions about wear and spare parts, please contact the Service and Maintenance Service. See Chapter 1.2.

10 TECHNICAL DATA

10.1 GATE DESCRIPTION

Type	**Top guided**	**Trackless**	**Trackless single leaf**
Clear pass [m]	3.0…6.0	3.0...8.0	3.0…4.0
Height [m]	2.0…4.0	2.0…3.0	2.0…3.0
Max. weight [kg]	±550…±1100	±495…±855	±370…±510
Construction	Guide rail at the top	Rod drive at the top	Rod drive at the top

10.2 DRIVE DESCRIPTION

FUZ2B	
Supply voltage	1-phase 110..240 VAC ± 10%/ N / PE
Fuse supplied by customer, when connected to the electricity mains	max. 16 A
External power supply for 24V devices	24 VDC stabilised (±10%) max. 500 mA (fused with a semiconductor fuse that resets automatically)

FUZ2B	
Control inputs	24 VDC / typical 15 mA < 2 V: inactive -> logical 0 > 10,5 V: active -> logical 1 (galvanically isolated internally)
Relay outputs K1 and K2 [1]	min. 10mA - max. 230 VAC / 3 A resp. 690 W
Maximum el. motor power	750 W
Housing material	ABS plastic
Dimensions W x H x D	182 x 328 x 102 mm (incl. spacers)
Weight	approx. 5 kilos
IP category of control cabi-	IP54
Operating temperature	-20 °C to +50 °C
Storage temperature range	-20 °C to +70 °C
Relative humidity range	max. 95% non-condensing

The functions described in this manual are designed for the prevailing climatic conditions in Europe.

[1] If inductive loads are switched (e.g. further relays or brakes), these must be equipped with a free-wheeling diode as an interference suppression measure.

Appendix A: Declarations DoP / DoC

Declaration of Performance

CE 21

Prestatieverklaring - Leistungserklärung - Déclaration des performances Prestandadeklaration - Ytelseserklæring - Ydeevnedeklaration

DoP No: CE-DOP-2021.04-00

Product type - Producttype - Produkttyp - Type de produit - Produkttyp - Produkttype - Produkttype
Folding gate - Vouwpoort - Falttor - Porte pliante - Vikgrind - Foldeport - Foldeport

Identification code - Identificatiecode - Kenncode - Code d'identification - Identifikationskod - Identifikasjonskode -Identifikationskode
sGate Top Guided - sGate Bottom Guided - sGate Trackless - sGate Trackless Single Leaf

Serial number - Serienummer - Seriennummer - Numéro de type - Serienummer - Serienummer - Serienummer
n/a

Intended use - Beoogd gebruik - Vorgesehener Verwendungszweck - Usage prévu - Avsedd användning - Tiltenkt bruk - Tilsigtet brug
Giving safe access for goods and vehicles accompanied or driven by persons in industrial, commercial or residential premises. Het bieden van een veilige toegang voor goederen en voertuigen begeleid of bestuurd door personen in industriële, commerciële of residentiële ruimten. Eine sichere Zufahrt für Waren und Fahrzeuge, begleitet oder geführt (gesteuert) von Personen, in industriellen, gewerblichen oder Wohnbereichen zu ermöglichen. Permettre l'accès des marchandises et des véhicules accompagnés ou conduits par des personnes, en toute sécurité, dans des locaux industriels et commerciaux ou des garages dans les zones d'habitation. För vilka avsedd användning är att ge säkert tillträde för gods och fordon åtföljda av eller körda av personer på industriområden, kommersiella områden eller bostadsområden. Gir sikker tilgang for varer og kjøretøy ledsaget eller kjørt av personer i industrielle, kommersielle eller boliglokaler. Give sikker adgang til varer og køretøjer, der ledsages eller køres af personer i industrielle, kommercielle eller boliglokaler.

Contact address manufacturer - Contactgegevens fabrikant - Kontaktanschrift des Herstellers - Adresse de contact du fabricant - Tillverkarens kontaktadress - Tillverkarens kontaktadress - Kontaktadresse fabrikant
Heras B.V. - Hekdam 1 - 5688JE Oirschot - Netherlands

System of assessment and verification of constancy of performance Systeem voor beoordeling en verificatie van de prestatiebestendigheid System zur Bewertung und Überprüfung der Leistungsbeständigkeit Système d'évaluation et de vérification de la constance des performances System för bedömning och fortlöpande kontroll av byggprodukternas prestanda System for vurdering og verifisering av prestasjonsbestandighet System til vurdering og kontrol af ydeevnens konstans
System 3 - Systeem 3 - System 3 - Système 3 - System 3 - System 3 - System 3

Declaration of Performance

CE 21

Prestatieverklaring - Leistungserklärung - Déclaration des performances Prestandadeklaration - Ytelseserklæring - Ydeevnedeklaration

DoP No: CE-DOP-2021.04-00

Report number - Rapportnummer – Reportnummer - Numéro de rapport - Rapportnummer - Rapportnummer - Rapportnummer
140300481, 200501301, VL13062, VL17156, VL17158

Identification number notified body - Nummer van de controle instantie - Kennnummer der notifizierten Stelle - Numéro d'identification de l'organisme notifié - Det anmälda organets identifikationsnummer Kontrollinstansens nummer - Identifikationsnummer bemyndiget organ
0063 Kiwa

Harmonised standard - Geharmoniseerde norm - Harmonisierte Norm - Norme harmonisée - Harmoniserad standard - Harmonisert standard - Harmoniseret standard
EN 13241:2003+A2:2016

Declared performance Aangegeven prestaties Erklärte Leistung Performances déclarées Prestanda som intygas Angitte prestasjoner Deklareret ydeevne	**Essential characteristics** Essentiële kenmerken Wesentliche Merkmale Caractéristiques essentielles Väsentliga egenskaper Grunnleggende kjennetegn Væsentlige egenskaber	**Performance** Prestaties Leistung Performances Prestanda Prestasjoner Ydeevne	**Requirements** Eisen Anforderungen Exigences Krav Krav Krav
	Watertightness	NPD	4.4.1
	Release of dangerous substances	NPD	4.2.9
	Resistance to wind load	class 3*	4.4.3
	Thermal resistance (where relevant)	NPD	4.4.5
	Air permeability	NPD	4.4.6
	Safe opening (for vertically moving doors)	NPD	4.2.8
	Definition of geometry of glass	NPD	4.2.5
	Mechanical resistance and stability	PASS	4.2.3
	Operating forces (for power operated doors)	PASS	4.3.3
	Durability of watertightness, thermal resistance and air permeability against degradation	NPD	4.4.7

Signed by Ondertekend door Unterzeichnet von Signé par Undertecknad av Undertegnet av Underskrevet af	Gilles Rabot Chief Executive Officer Oirschot 27-05-2021

Declaration of Performance

CE 21

Prestatieverklaring - Leistungserklärung - Déclaration des performances Prestandadeklaration - Ytelseserklæring - Ydeevnedeklaration

DoP No: CE-DOP-2021.04-00

Assessed products - Beoordeelde producten - Bewertete Produkte - Produits évalués - Produkter som bedömts - Vurderes produkter - Vurderede produkter		
sGate Top Guided		
Technical data	Version: Type: Drive: Control unit: Safety edge:	Double leaf Bar, Pallas/Uni, Zenith, Perforated sheet infill Sumitomo CNVM03-6125DAEB/G/V63M/4 FEIG TST FUZ2-B ASO 25.30 TT, 25.45 TT, Mayser SP37-2
Wind class 3	Opening x Height:	≤6m x ≤3m

sGate Bottom Guided		
Technical data	Version: Type: Drive: Control unit: Safety edge:	Double leaf Bar, Pallas/Uni, Zenith, Perforated sheet infill Sumitomo CNVM03-6125DAEB/G/V63M/4 FEIG TST FUZ2-B ASO 25.30 TT, 25.45 TT, Mayser SP37-2
Wind class 3	Opening x Height:	≤6m x ≤4m

sGate Trackless Double Leaf		
Technical data	Version: Type: Drive: Control unit: Safety edge:	Double leaf Bar, Pallas/Uni, Zenith, (Perforated) sheet infill Sumitomo CNVM03-6125DAEB/G/V63M/4 FEIG TST FUZ2-B ASO 25.30 TT, 25.45 TT, Mayser SP37-2
*Wind Class 3	Type: Opening x height: Type: Opening x height: Type: Opening x height: Type: Opening x height: Type: Opening x height:	Bar infill ≤6m x ≤3m Pallas/Uni infill ≤8m x ≤3m Zenith infill ≤6m x ≤3m Perforated sheet (44% permeability) infill ≤5,5m x ≤3m ≤6m x ≤2,5m Sheet infill ≤4m x ≤3m ≤4,5m x ≤2,5m ≤5m x ≤2m

Declaration of Performance

CE 21

Prestatieverklaring - Leistungserklärung - Déclaration des performances Prestandadeklaration - Ytelseserklæring - Ydeevnedeklaration

DoP No: CE-DOP-2021.04-00

*Wind Class 2	Type: Opening x height:	Bar infill 6,5m x 2m, 2,5m, 3m; 7,0m x 2m, 2,5m, 3m 7,5m x 2m, 2,5m, 3m; 8,0m x 2m, 2,5m, 3m
	Type: Opening x height:	Zenith infill 6,5m x 2m, 2,5m, 3m; 7,0m x 2m, 2,5m 7,5m x 2m
	Type: Opening x height:	Perforated sheet (44% permeability) infill 6m x 3,0m; 6,5m x 2m, 2,5m, 3m 7,0m x 2m, 2,5m; 7,5m x 2m
	Type: Opening x height:	Sheet infill 4,5m x 3,0m; 5m x 2,5m, 3,0m 5,5m x 2,0m, 2,5m; 6,0m x 3,0m

sGate Trackless Single Leaf		
Technical data	Version: Type: Drive: Control unit: Safety edge:	Single leaf Bar, Pallas/Uni, Zenith, Perforated sheet infill Sumitomo CNVM03-6125DAEB/G/V63M/4 FEIG TST FUZ2-B ASO 25.30 TT, 25.45 TT, Mayser SP37-2
*Wind Class 3	Type: Opening x height:	Bar infill 3m x 2m, 2,5m, 3m
	Type: Opening x height:	Pallas/Uni infill 3m x 2m, 2,5m, 3m; 3,5m x 2m, 2,5m, 3m 4m x 2m, 2,5m, 3m
	Type: Opening x height:	Zenith infill 3m x 2m, 2,5m, 3m
	Type: Opening x height:	Perforated sheet (44% permeability) infill 3m x 2m, 2,5m
*Wind Class 2	Type: Opening x height:	Bar infill 3,5m x 2m, 2,5m, 3m; 4m x 2m, 2,5m, 3m
	Type: Opening x height:	Zenith infill 3,5m x 2m, 2,5m
	Type: Opening x height:	Perforated sheet (44% permeability) infill 3m x 3m; 3,5m x 2m, 2,5m
	Type: Opening x height:	Full sheet infill 3m x 2m

Declaration of Performance

Prestatieverklaring - Leistungserklärung - Déclaration des performances Prestandadeklaration - Ytelseserklæring - Ydeevnedeklaration

DoP No: UKCA-DOP-2021.04-00

Product type - Producttype - Produkttyp - Type de produit - Produkttyp - Produkttype - Produkttype
Folding gate - Vouwpoort - Falttor - Porte pliante - Vikgrind - Foldeport - Foldeport

Identification code - Identificatiecode - Kenncode - Code d'identification - Identifikationskod - Identifikasjonskode -Identifikationskode
sGate Top Guided - sGate Bottom Guided - sGate Trackless - sGate Trackless Single Leaf

Serial number - Serienummer - Seriennummer - Numéro de type - Serienummer - Serienummer - Serienummer
n/a

Intended use - Beoogd gebruik - Vorgesehener Verwendungszweck - Usage prévu - Avsedd användning - Tiltenkt bruk - Tilsigtet brug
Giving safe access for goods and vehicles accompanied or driven by persons in industrial, commercial or residential premises. Het bieden van een veilige toegang voor goederen en voertuigen begeleid of bestuurd door personen in industriële, commerciële of residentiële ruimten. Eine sichere Zufahrt für Waren und Fahrzeuge, begleitet oder geführt (gesteuert) von Personen, in industriellen, gewerblichen oder Wohnbereichen zu ermöglichen. Permettre l'accès des marchandises et des véhicules accompagnés ou conduits par des personnes, en toute sécurité, dans des locaux industriels et commerciaux ou des garages dans les zones d'habitation. För vilka avsedd användning är att ge säkert tillträde för gods och fordon åtföljda av eller körda av personer på industriområden, kommersiella områden eller bostadsområden. Gir sikker tilgang for varer og kjøretøy ledsaget eller kjørt av personer i industrielle, kommersielle eller boliglokaler. Give sikker adgang til varer og køretøjer, der ledsages eller køres af personer i industrielle, kommercielle eller boliglokaler.

Contact address manufacturer - Contactgegevens fabrikant - Kontaktanschrift des Herstellers - Adresse de contact du fabricant - Tillverkarens kontaktadress - Tillverkarens kontaktadress - Kontaktadresse fabrikant
Heras B.V. - Hekdam 1 - 5688JE Oirschot - Netherlands

System of assessment and verification of constancy of performance Systeem voor beoordeling en verificatie van de prestatiebestendigheid System zur Bewertung und Überprüfung der Leistungsbeständigkeit Système d'évaluation et de vérification de la constance des performances System för bedömning och fortlöpande kontroll av byggprodukternas prestanda System for vurdering og verifisering av prestasjonsbestandighet System til vurdering og kontrol af ydeevnens konstans
System 3 - Systeem 3 - System 3 - Système 3 - System 3 - System 3 - System 3

Declaration of Performance

Prestatieverklaring - Leistungserklärung - Déclaration des performances Prestandadeklaration - Ytelseserklæring - Ydeevnedeklaration

DoP No: UKCA-DOP-2021.04-00

Report number - Rapportnummer – Reportnummer - Numéro de rapport - Rapportnummer - Rapportnummer - Rapportnummer
140300481, 200501301, VL13062, VL17156, VL17158

Identification number notified body - Nummer van de controle instantie - Kennnummer der notifizierten Stelle - Numéro d'identification de l'organisme notifié - Det anmälda organets identifikationsnummer Kontrollinstansens nummer - Identifikationsnummer bemyndiget organ
0063 Kiwa

Harmonised standard - Geharmoniseerde norm - Harmonisierte Norm - Norme harmonisée - Harmoniserad standard - Harmonisert standard - Harmoniseret standard
EN 13241:2003+A2:2016

Declared performance Aangegeven prestaties Erklärte Leistung Performances déclarées Prestanda som intygas Angitte prestasjoner Deklareret ydeevne	**Essential characteristics** Essentiële kenmerken Wesentliche Merkmale Caractéristiques essentielles Väsentliga egenskaper Grunnleggende kjennetegn Væsentlige egenskaber	**Performance** Prestaties Leistung Performances Prestanda Prestasjoner Ydeevne	**Requirements** Eisen Anforderungen Exigences Krav Krav Krav
	Watertightness	NPD	4.4.1
	Release of dangerous substances	NPD	4.2.9
	Resistance to wind load	class 3*	4.4.3
	Thermal resistance (where relevant)	NPD	4.4.5
	Air permeability	NPD	4.4.6
	Safe opening (for vertically moving doors)	NPD	4.2.8
	Definition of geometry of glass	NPD	4.2.5
	Mechanical resistance and stability	PASS	4.2.3
	Operating forces (for power operated doors)	PASS	4.3.3
	Durability of watertightness, thermal resistance and air permeability against degradation	NPD	4.4.7

Signed by Ondertekend door Unterzeichnet von Signé par Undertecknad av Undertegnet av Underskrevet af	Gilles Rabot Chief Executive Officer Oirschot 27-05-2021

Declaration of Performance

Prestatieverklaring - Leistungserklärung - Déclaration des performances Prestandadeklaration - Ytelseserklæring - Ydeevnedeklaration

DoP No: UKCA-DOP-2021.04-00

Assessed products - Beoordeelde producten - Bewertete Produkte - Produits évalués - Produkter som bedömts - Vurderes produkter - Vurderede produkter		
sGate Top Guided		
Technical data	Version: Type: Drive: Control unit: Safety edge:	Double leaf Bar, Pallas/Uni, Zenith, Perforated sheet infill Sumitomo CNVM03-6125DAEB/G/V63M/4 FEIG TST FUZ2-B ASO 25.30 TT, 25.45 TT, Mayser SP37-2
Wind class 3	Opening x Height:	≤6m x ≤3m

sGate Bottom Guided		
Technical data	Version: Type: Drive: Control unit: Safety edge:	Double leaf Bar, Pallas/Uni, Zenith, Perforated sheet infill Sumitomo CNVM03-6125DAEB/G/V63M/4 FEIG TST FUZ2-B ASO 25.30 TT, 25.45 TT, Mayser SP37-2
Wind class 3	Opening x Height:	≤6m x ≤4m

sGate Trackless Double Leaf		
Technical data	Version: Type: Drive: Control unit: Safety edge:	Double leaf Bar, Pallas/Uni, Zenith, (Perforated) sheet infill Sumitomo CNVM03-6125DAEB/G/V63M/4 FEIG TST FUZ2-B ASO 25.30 TT, 25.45 TT, Mayser SP37-2
*Wind Class 3	Type: Opening x height: Type: Opening x height: Type: Opening x height: Type: Opening x height: Type: Opening x height:	Bar infill ≤6m x ≤3m Pallas/Uni infill ≤8m x ≤3m Zenith infill ≤6m x ≤3m Perforated sheet (44% permeability) infill ≤5,5m x ≤3m ≤6m x ≤2,5m Sheet infill ≤4m x ≤3m ≤4,5m x ≤2,5m ≤5m x ≤2m

Declaration of Performance

Prestatieverklaring - Leistungserklärung - Déclaration des performances Prestandadeklaration - Ytelseserklæring - Ydeevnedeklaration

DoP No: UKCA-DOP-2021.04-00

*Wind Class 2	Type: Opening x height:	Bar infill 6,5m x 2m, 2,5m, 3m; 7,0m x 2m, 2,5m, 3m 7,5m x 2m, 2,5m, 3m; 8,0m x 2m, 2,5m, 3m
	Type: Opening x height:	Zenith infill 6,5m x 2m, 2,5m, 3m; 7,0m x 2m, 2,5m 7,5m x 2m
	Type: Opening x height:	Perforated sheet (44% permeability) infill 6m x 3,0m; 6,5m x 2m, 2,5m, 3m 7,0m x 2m, 2,5m; 7,5m x 2m
	Type: Opening x height:	Sheet infill 4,5m x 3,0m; 5m x 2,5m, 3,0m 5,5m x 2,0m, 2,5m; 6,0m x 3,0m

sGate Trackless Single Leaf		
Technical data	Version: Type: Drive: Control unit: Safety edge:	Single leaf Bar, Pallas/Uni, Zenith, Perforated sheet infill Sumitomo CNVM03-6125DAEB/G/V63M/4 FEIG TST FUZ2-B ASO 25.30 TT, 25.45 TT, Mayser SP37-2
*Wind Class 3	Type: Opening x height:	Bar infill 3m x 2m, 2,5m, 3m
	Type: Opening x height:	Pallas/Uni infill 3m x 2m, 2,5m, 3m; 3,5m x 2m, 2,5m, 3m 4m x 2m, 2,5m, 3m
	Type: Opening x height:	Zenith infill 3m x 2m, 2,5m, 3m
	Type: Opening x height:	Perforated sheet (44% permeability) infill 3m x 2m, 2,5m
*Wind Class 2	Type: Opening x height:	Bar infill 3,5m x 2m, 2,5m, 3m; 4m x 2m, 2,5m, 3m
	Type: Opening x height:	Zenith infill 3,5m x 2m, 2,5m
	Type: Opening x height:	Perforated sheet (44% permeability) infill 3m x 3m; 3,5m x 2m, 2,5m
	Type: Opening x height:	Full sheet infill 3m x 2m

Declaration of Conformity

Verklaring van overeenstemming - Konformitätserklärung - Déclaration de conformité - Deklaration om överensstämmelse - Konformitetserklæring - Overensstemmelseserklæringen

DoC No: CE-DOC-2021.04-01

EN We herewith declare that the product complies with the following directives and standards.
NL Hiermee verklaren wij dat het product in overeenstemming is met de volgende richtlijnen en normen.
DE Hiermit erklären wir, dass die Produkte der nachfolgenden Richtlinien und Normen entspricht.
FR Par la présente nous déclarons que le produit est conforme aux directives et normes suivantes.
SV Vi deklarerar härmed att produkten överensstämmer med följande riktlinjer och normer.
NO Vi erklærer med dette at dette produktet er konformt med følgende direktiv og normer.
DA Vi erklærer hermed, at produktet er i overensstemmelse med følgende direktiver og standarder.

Product type - Producttype - Produkttyp - Type de produit - Produkttyp - Produkttype - Produkttype
Folding gate - Vouwpoort - Falttor - Porte pliante - Vikgrind - Foldeport - Foldeport

Identification code - Identificatiecode - Kenncode - Code d'identification - Identifikationskod - Identifikasjonskode -Identifikationskode
sGate Top Guided - sGate Bottom Guided - sGate Trackless - sGate Trackless SL

Contact address manufacturer - Contactgegevens fabrikant - Kontaktanschrift des Herstellers - Adresse de contact du fabricant - Tillverkarens kontaktadress - Tillverkarens kontaktadress - Kontaktadresse fabrikant
Heras B.V. - Hekdam 1 - 5688JE Oirschot - Netherlands

Directives - Richtlijnen - Richtlinien - Directives - Direktiven - Direktiver - Direktiver	
2006/42/EC	Machine Directive
305/2011	Construction Products Regulation
2014/30/EU	EMC Directive

Standards - Normen - Normen - Normes - Standarder - Standarder - Standarder
EN 13241:2003+A2:2016 - EN 12604:2017+A1:2020 EN 12453:2017+A1:2021 - EN-IEC 60335-2-103:2015

Signed by Ondertekend door Unterzeichnet von Signé par Undertecknad av Undertegnet av Underskrevet af	Gilles Rabot Chief Executive Officer Oirschot 04-02-2022

Declaration of Conformity

Verklaring van overeenstemming - Konformitätserklärung - Déclaration de conformité - Deklaration om överensstämmelse - Konformitetserklæring – Overensstemmelseserklæringen

DoC No: UKCA-DOC-2021.04-01

EN We herewith declare that the product complies with the following directives and standards.
NL Hiermee verklaren wij dat het product in overeenstemming is met de volgende richtlijnen en normen.
DE Hiermit erklären wir, dass die Produkte der nachfolgenden Richtlinien und Normen entspricht.
FR Par la présente nous déclarons que le produit est conforme aux directives et normes suivantes.
SV Vi deklarerar härmed att produkten överensstämmer med följande riktlinjer och normer.
NO Vi erklærer med dette at dette produktet er konformt med følgende direktiv og normer.
DA Vi erklærer hermed, at produktet er i overensstemmelse med følgende direktiver og standarder.
s

Product type - Producttype - Produkttyp - Type de produit - Produkttyp - Produkttype - Produkttype
Folding gate - Vouwpoort - Falttor - Porte pliante - Vikgrind - Foldeport - Foldeport

Identification code - Identificatiecode - Kenncode - Code d'identification - Identifikationskod - Identifikasjonskode -Identifikationskode
sGate Top Guided - sGate Bottom Guided - sGate Trackless - sGate Trackless SL

Contact address manufacturer - Contactgegevens fabrikant - Kontaktanschrift des Herstellers - Adresse de contact du fabricant - Tillverkarens kontaktadress - Tillverkarens kontaktadress - Kontaktadresse fabrikant
Heras B.V. - Hekdam 1 - 5688JE Oirschot - Netherlands

Directives - Richtlijnen - Richtlinien - Directives - Direktiven - Direktiver - Direktiver
Supply of Machinery (Safety) Regulations 2008 Electromagnetic Compatibility Regulations 2016 Construction Products Regulations 2013

Standards - Normen - Normen - Normes - Standarder - Standarder - Standarder
EN 13241:2003+A2:2016 - EN 12604:2017+A1:2020 EN 12453:2017+A1:2021 - EN-IEC 60335-2-103:2015

Signed by Ondertekend door Unterzeichnet von Signé par Undertecknad av Undertegnet av Underskrevet af	Gilles Rabot Chief Executive Officer Oirschot 04-02-2022

Appendix B: Overview of error messages

P920	Read out fault history	
F000	Door open outside position	– Parameter value emergency limit switch – Limit switch open range too small – The mechanical brake is defective or set incorrectly
F005	Door closed outside position	– Parameter value emergency limit switch – Limit switch open range too small – The mechanical brake is defective or set incorrectly
F020	Running time exceeded during opening or closing or in hold to run mode of control	– Current motor has exceeded a set maximum running time – The gate runs with difficulty or is obstructed – If mechanical limit switches are used, a limit switch may be defective – If an encoder is used, this fault is virtually impossible
F021	Testing the emergency opening was not successful	– The maximum permissible running time (P.490) was exceeded during the test. Call Customer Service
F030	Gate runs slowly, the change in position is slower than expected	– Axle of the encoder on the motor is loose – Wrong positioning system has been selected. – Motor phase is missing – Motor brake is not released – Error recognition setting too small – Movement speed too low – Mechanical limit switch

		remains active or is defective
F031	Reversal time error at DES	– Wrong direction of rotation – In the selection of the encoder, an incorrect channel has been selected. A with B were switched (pulse generators are not used)
F033	Protocols of the position sensor erroneous	– Failure of the position sensor's bus. No position data received over a longer period of time.
F043	Failure of the pre-limit switch of the photoelectric light barrier	– The pre-limit switch of the photoelectric light barrier also remains in the middle or the upper end position respectively.
F060	Crash detected	– Crash detected, but not remedied.
F063	Adjustment error to loop 3	– Disturbed environment. Loop is outside the tolerance values.
F064	Adjustment error to loop 4	– Disturbed environment. Loop is outside the tolerance values.
F067	Safety loop 3 defect	– Short circuit or interruption of loop 3
F068	Safety loop 4 defect	– Short circuit or interruption of loop 4
F080	Perform maintenance	– Service counter has reached maintenance status
F090	Set control parameters	– The minimum basic parameters are not set in the control system
F201	Internal emergency stop active or watchdog active	– Check the internal emergency stop wiring, test the microprocessor by pressing the stop sheet, it will display Information about the possible cause

F211	External emergency stop 1	– Check external emergency stop wiring of 1
F212	External emergency stop 2	– Check external emergency stop wiring of 2
F320	Gate blocked during opening	– The gate is stopped during opening
F325	Gate blocked during closing	– The gate is stopped during closing
F360 to F364		– Safety edge 1 is malfunctioning
F370 to F374		– Safety edge 2 is malfunctioning
F380	Short circuit on the safety edge entry	– Cable short circuit detected at the safety edges
F383	Short circuit on the safety edge entry detected	– Connection cable defective or not connected – Terminator damaged or missing – Jumper set incorrectly
F400	RAM error	– Reset FUE/FUZ
F401	Watchdog error	– Internal Watchdog activated.
F40A	Software exception	– Internal error detected.
F40B	Expansion board communication error	– Communication disrupted between the main circuit board and the expansion board.
F40C	Unknown expansion board (Connected via CAN)	– Incorrect coding of the hardware of the expansion board. Operating software does not support the expansion board. Expansion board defective
F410	Overcurrent limit ((motor current or DC link)	– Motor data set incorrectly – sGate is running too sluggishly
F420	Overcurrent DC link 1	– Braking chopper malfunctioning / defect /

		not present – Mains voltage too high – Motor returning too much energy (generator effect). E.g. when gate is closed and during a storm.
F425	Mains overvoltage	– The supply voltage of the control is too high.
F426	Mains undervoltage	– The supply voltage of the control is too low.
F430	Heat sink temperature outside working range limit 1	– Temperature too low limit 1
F435	Temperature in housing in limit range	– Temperature in the cabinet too low, high
F440	Overload current in intermediate circuit limit 1	– Set voltage increase ("Boost") not adjusted. Motor incorrectly dimensioned for gate used. Gate moves in a sluggish manner.
F510		– Motor using too much power limit 2
F511	Malfunction in DC supply	– DC supply not possible (overcurrent, IGBT error F.519, short-circuit, 24V error, excess temperature). Emergency stop is activated.
F512	Offset motor current / Intermediate circuit current faulty	– Faulty hardware.
F515	Motor protection function has recognised overload current	– Incorrect motor characteristic curve (Motor Nominal Current) set (P101). – Voltage increase / Boost set too high (P140 or P145) – motor incorrectly dimensioned

F519	IGBT control unit has detected overload current.	– Short circuit or earth contact at motor terminals. – Nominal motor frequency set incorrectly (P.100). – Voltage increase / boost set much too high (P.140 or P.145). – Motor incorrectly dimensioned. – Motor winding defective – Brief interruption of emergency-stop circuit.
F520	Overvoltage in intermediate circuit Limit 2	– Brake chopper malfunctioning / defective / not present. Input supply voltage too high. The motor feeds too much energy back during generator mode, because it needs to reduce the kinetic energy of the gate.
F521	Undervoltage in intermediate circuit	– Input supply voltage often too low when operating under load. Load too high / output stage or brake chopper malfunction.
F524	Ext. 24 VDC problem	– External 24 VDC fails or is too low/ closure.
F525	Overvoltage input	– Mains voltage is too high or unstable
F530	Low temperature	– Temperature of the controls is too low limit 2
F535	High temperature	– Temperature of the controls is too high (ventilate or cool)
F540	Overload current in intermediate circuit limit 2.	– Set voltage increase ("Boost") not adjusted. Motor incorrectly di-

		mensioned for the gate used. – Gate moves in a sluggish manner.
F700	Gate position registration error	– When using limit switches, both limit switches are activated at the same time
F701	CLOSED position not found during timer mode	– The simulated limit switch CLOSED has not reached the expected position. – The tolerance range of the detection time is too small (P.229)
F702	OPEN position not found during timer mode	– The simulated limit switch OPEN has not reached the expected position. – The tolerance range of the detection time is too small (P.239)
F752	Timeout during protocol transfer	– Interface cable defective / interrupted. – Incorrect operation of the evaluation electronics of the absolute encoder. – Defective hardware or an environment with a high level of electrical interference. – Shield the control cable. – Fit RC module (100Ω+100nF) to brake.
F760	Gate position outside window range	– Incorrect operation of the drive of the position sensors – Incorrect operation of the absolute encoder of the analysis electronics – Defective hardware or strongly disturbed environment

F763	DES-B malfunctions	– The encoder is malfunctioning.
F766	Internal TST PD/PE error	– Failure of the position sensor TST PD/PE. Perform a reset.
F767	Over temperature TST PD	– Temperature in housing too high
F768	Battery almost empty	– The battery current of the TST PD is too low (replace battery)
F7A2	Communication disrupted	– Communication disrupted or communication print defective
F910	No communication with the expansion board possible.	– Communication with the expansion board is disrupted. No expansion board inserted. CAN connection disrupted (cable breakage or no power supply for the expansion board).
F911	ROM error in the expansion board	– Incorrect Flash code – Defective hardware or an environment with a high level of electrical interference.
F912	RAM error in the expansion board	– Defective hardware or an environment with a high level of electrical interference.
F920	2.5 V malfunction	– Hardware defect
F921	15 V malfunction	– Hardware defect
F922		– Emergency circuit not closed (see connection terminals)
F931	ROM malfunction	– incorrect ROM code / defective hardware
F932	RAM malfunction	– Hardware defect
F933	CPU malfunction	– the pulse frequency to the CPU is not in order

Heras B.V.
Hekdam 1
P.O. box 30
5688 ZG Oirschot

Tel: +31 499 55 12 55
E-mail: infoNL@heras.nl

Local supplier stamp:

Type: Master

Group: sGate uni Master/Slave

Version no: 4.0

Language: en_EN

Rev. date:	27-07-2022	**Type:**	Master	**Project name**	dr-unit diverse			**Page title:**	**Page**
Version no:	4.0								
Drawn by:	WWI	**Language:**	en_EN	**Group code**	sGate uni	**Description**	Master/Slave	Title Sheet / Front Sheet	1 / 15

Index

[MASTER]

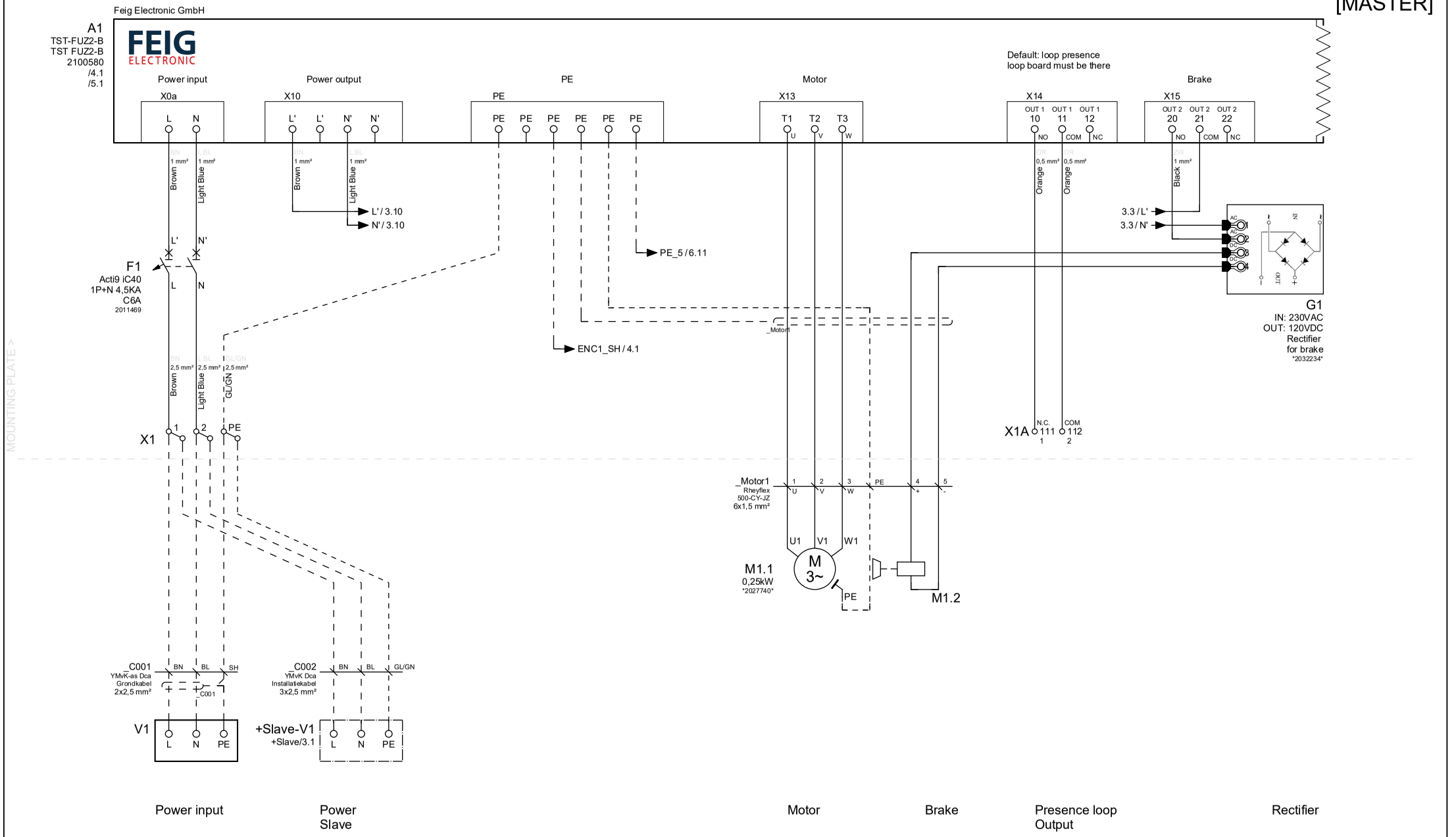

Rev. date: 27-07-2022	**Type:** Master	**Project name** dr-unit diverse		**Page title:**		**Page**
Version no: 4.0						
Drawn by: WWI	**Language:** en_EN	**Group code** sGate uni	**Description** Master/Slave	TST FUZ2-B		3 / 15

[MASTER]

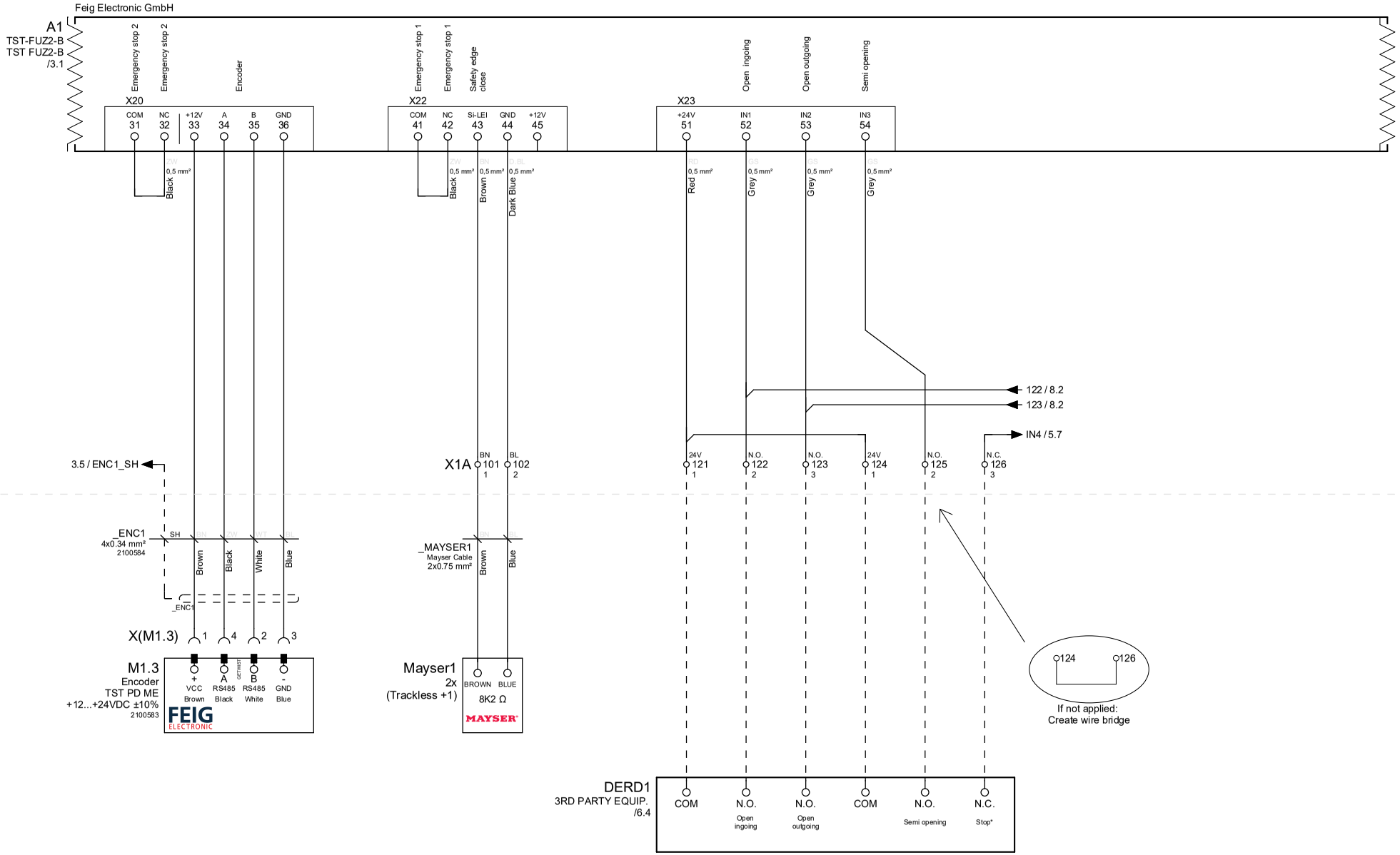

Rev. date:	27-07-2022	**Type:**	Master	**Project name**	dr-unit diverse		**Page title:**		**Page**
Version no:	4.0								
Drawn by:	WWI	**Language:**	en_EN	**Group code**	sGate uni	**Description**	Master/Slave	TST FUZ2-B	4 / 15

Eplan version: 2.9.4

[MASTER]

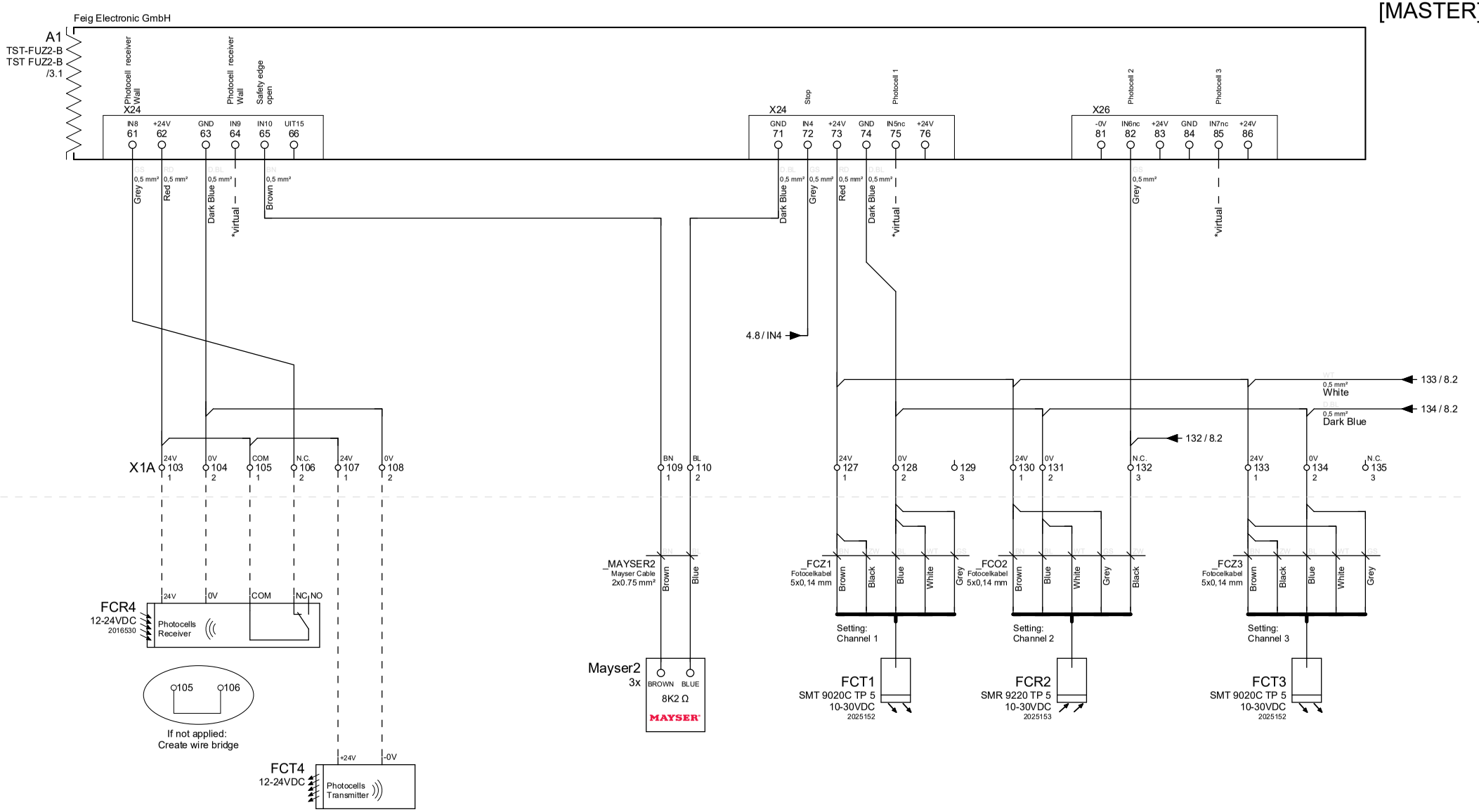

Photocell receiver 4 wall

Photocell transmitter 4 wall

Safety edge open

Photocell transmitter 1

Photocell receiver 2

Photocell transmitter 3

Rev. date:	27-07-2022	**Type:**	Master	**Project name**	dr-unit diverse		**Page title:**		**Page**
Version no:	4.0								
Drawn by:	WWI	**Language:**	en_EN	**Group code**	sGate uni	**Description**	Master/Slave	TST FUZ2-B	5 / 15

Expansion board TST-FUZ-xK

[MASTER]

Feig Electronic GmbH

A1.2
TST RFUxK-A
TST RFUxK-A
2100581

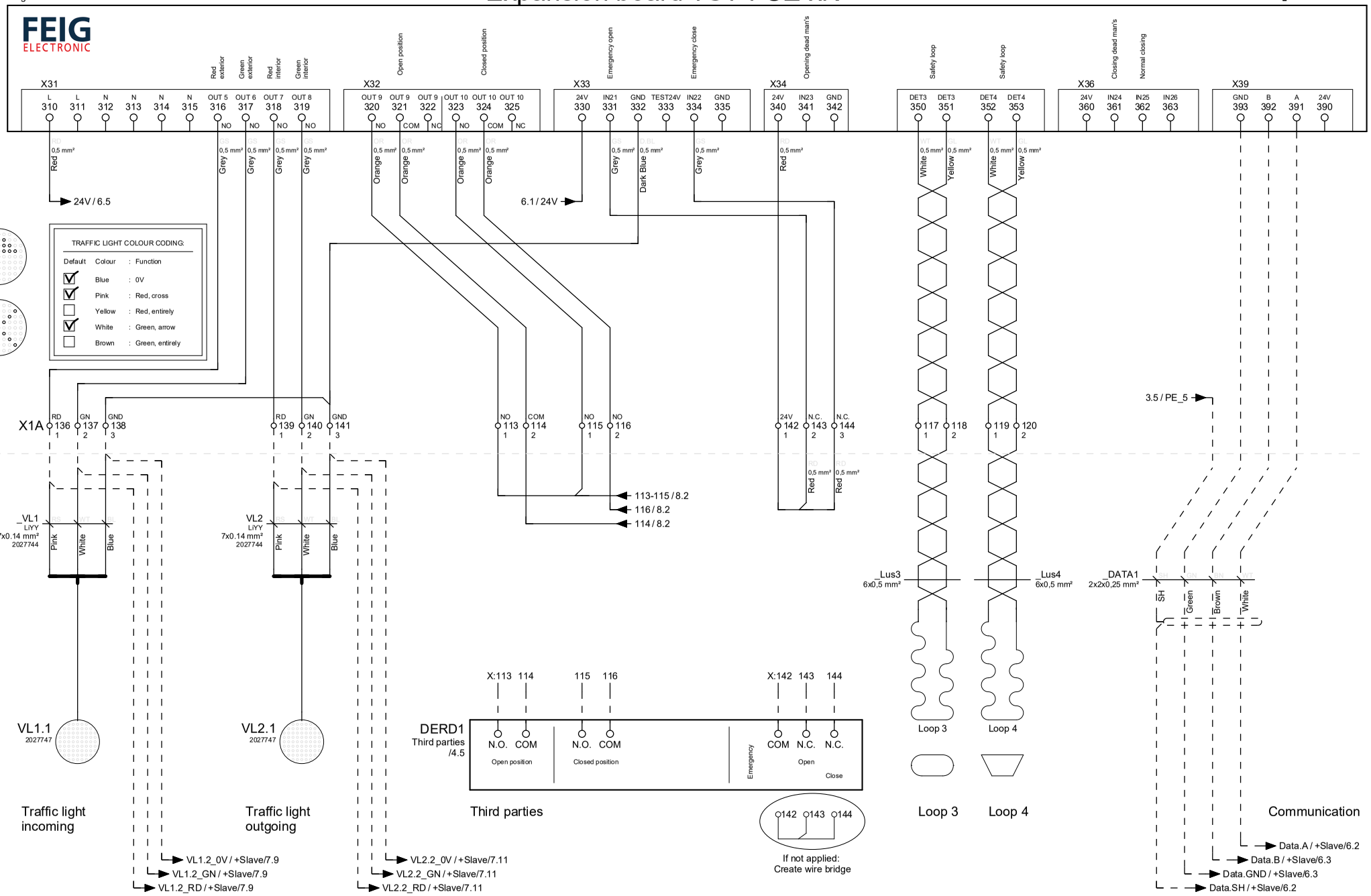

Rev. date:	27-07-2022	**Type:**	Master	**Project name**	dr-unit diverse	**Page title:**	**Page**
Version no:	4.0						
Drawn by:	WWI	**Language:**	en_EN	**Group code**	sGate uni	**Description** Master/Slave	Expansion board TST-FUZ-xK	6 / 15

Eplan version: 2.9.4

TST SUVEK2-A, 2 channel detector

[MASTER]

Feig Electronic GmbH

A1.3
TST SUVEK2-A
2100586

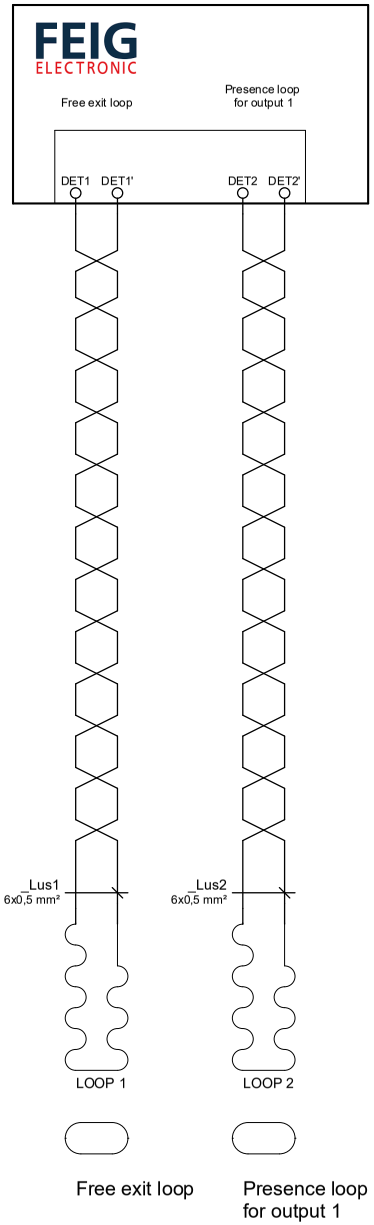

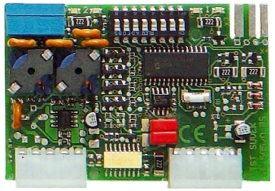

Rev. date:	27-07-2022	**Type:**	Master	**Project name**	dr-unit diverse			**Page title:**	**Page**
Version no:	4.0								
Drawn by:	WWI	**Language:**	en_EN	**Group code**	sGate uni	**Description**	Master/Slave	TST SUVEK2-A 2 channel detector optional*	7 / 15

[MASTER]

Heras B.V.

A3
Heras Cloud Unit
HCU
24V
2032274

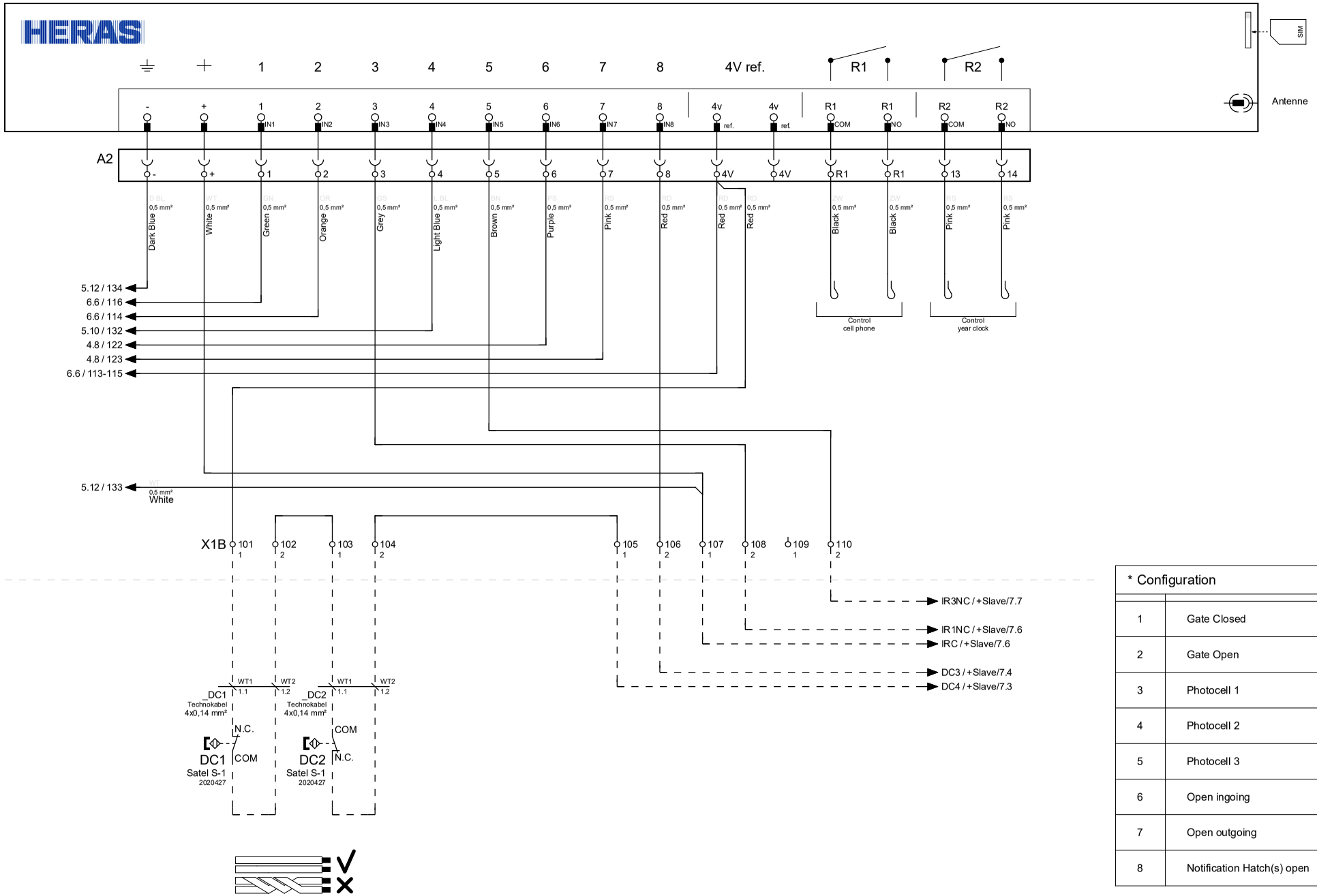

* Configuration	
1	Gate Closed
2	Gate Open
3	Photocell 1
4	Photocell 2
5	Photocell 3
6	Open ingoing
7	Open outgoing
8	Notification Hatch(s) open

Rev. date:	27-07-2022	**Type:**	Master	**Project name**	dr-unit diverse	**Page title:**	**Page**
Version no:	4.0						
Drawn by:	WWI	**Language:**	en_EN	**Group code**	sGate uni	**Description** Master/Slave	Heras Cloud Unit (HCU)	8 / 15

Eplan version: 2.9.4

[MASTER]

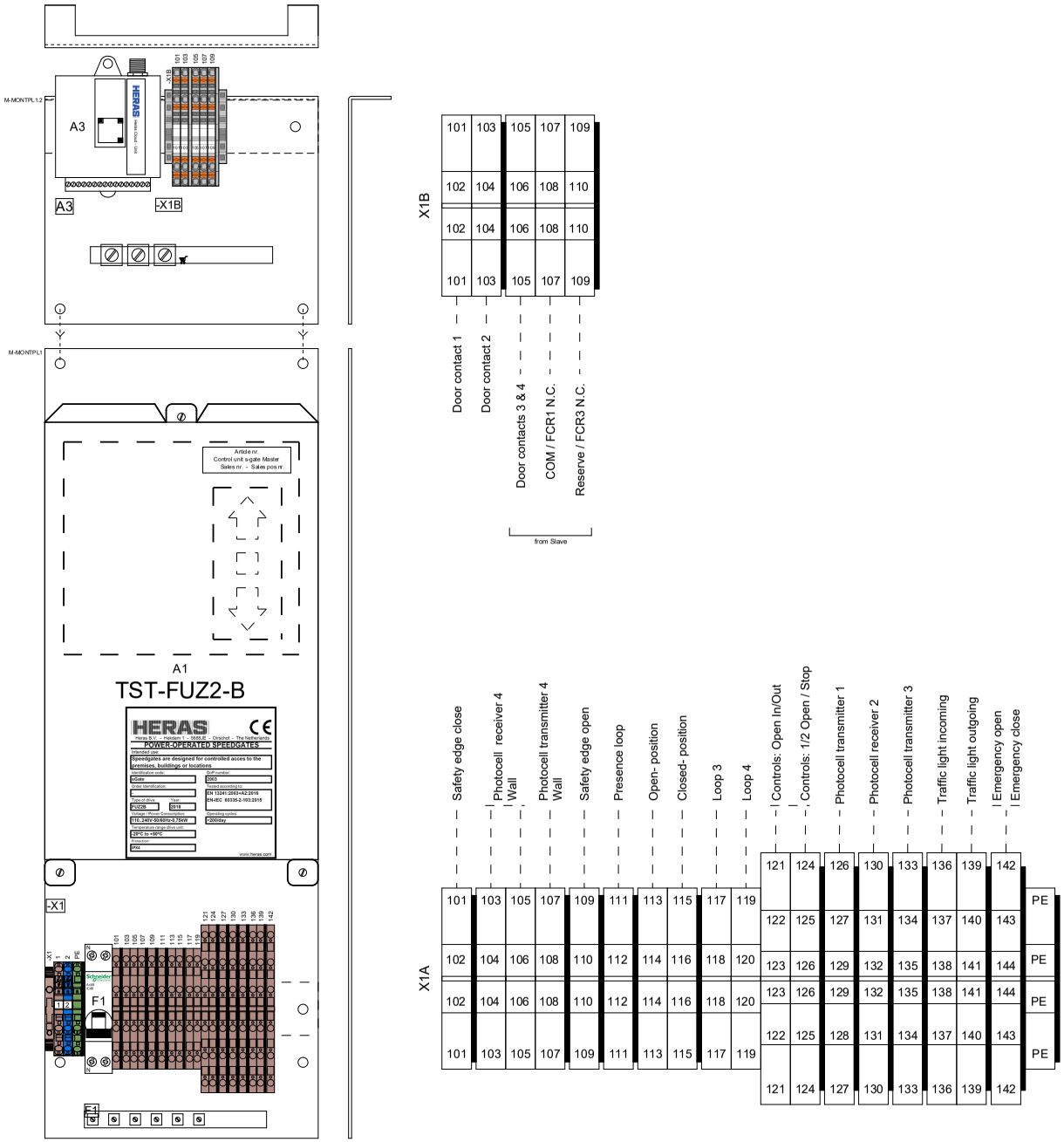

Rev. date:	27-07-2022	**Type:**	Master	**Project name**	dr-unit diverse	**Page title:**	**Page**
Version no:	4.0						
Drawn by:	WWI	**Language:**	en_EN	**Group code**	sGate uni	**Description** Master/Slave	View mounting plate	9 / 15

Eplan version: 2.9.4

Industrialization_klemmenaansluitlijst_Voorwaardelijk

Terminals connection list

A2

From	Connection code	Function text	Cable No.	Cable Type.	Cable Wire	Bridge	Level	Bridge	Page
	-A3:1					'	1	'	=sGate uni+Master/8
	-A3:2					'	2	'	=sGate uni+Master/8
	-A3:3					'	3	'	=sGate uni+Master/8
	-A3:4					'	4	'	=sGate uni+Master/8
	-A3:4v					'	4V	'	=sGate uni+Master/8
	-A3:4v					'	4V	'	=sGate uni+Master/8
	-A3:5					'	5	'	=sGate uni+Master/8
	-A3:6					'	6	'	=sGate uni+Master/8
	-A3:7					'	7	'	=sGate uni+Master/8
	-A3:8					'	8	'	=sGate uni+Master/8
	-A3:R2					'	13	'	=sGate uni+Master/8
	-A3:R2					'	14	'	=sGate uni+Master/8
	-A3:+					'	+	'	=sGate uni+Master/8
	-A3:-					'	-	'	=sGate uni+Master/8
	-A3:R1					'	R1	'	=sGate uni+Master/8
	-A3:R1					'	R1	'	=sGate uni+Master/8

Terminals connection list

X1

From	Connection code	Function text	Cable No.	Cable Type.	Cable Wire	Bridge	Level	Bridge	Page
Power input	-V1:L	Power input	_C001	2x2,5 mm²	BN	'	1	'	=sGate uni+Master/3
	+Slave-S-V1:L		_C002	3x2,5 mm²	BN				
Power input	-V1:N	Power input	_C001	2x2,5 mm²	BL	'	2	'	=sGate uni+Master/3
	+Slave-S-V1:N		_C002	3x2,5 mm²	BL				
Power Slave	-V1:PE	Power Slave	_C001	2x2,5 mm²	SH	'	PE	'	=sGate uni+Master/3
	+Slave-S-V1:PE		_C002	3x2,5 mm²	GL/GN				

Terminals connection list

X1A

From	Connection code	Function text	Cable No.	Cable Type.	Wire	Bridge	Level		Bridge	Page
Safety edge close	-Mayser1:	BROWN	_MAYSER1	2x0.75 mm²	BN		1	101		=sGate uni+Master/4
Safety edge close	-Mayser1:	BLUE	_MAYSER1	2x0.75 mm²	BL		2	102		=sGate uni+Master/4
Photocell receiver 4 wall	-FCR4:24V	Photocell receiver 4 wall					1	103		=sGate uni+Master/5
Photocell receiver 4 wall	-FCR4:0V	Photocell receiver 4 wall					2	104		=sGate uni+Master/5
Photocell receiver 4 wall	-FCR4:COM	Photocell receiver 4 wall					1	105		=sGate uni+Master/5
Photocell receiver 4 wall	-FCR4:NC	Photocell receiver 4 wall					2	106		=sGate uni+Master/5
Photocell transmitter 4 wall	-FCT4:+24V	Photocell transmitter 4 wall					1	107		=sGate uni+Master/5
Photocell transmitter 4 wall	-FCT4:-0V	Photocell transmitter 4 wall					2	108		=sGate uni+Master/5
Safety edge open	-Mayser2:	BROWN	_MAYSER2	2x0.75 mm²	BN		1	109		=sGate uni+Master/5
Safety edge open	-Mayser2:	BLUE	_MAYSER2	2x0.75 mm²	BL		2	110		=sGate uni+Master/5
Presence loop Output							1	111		=sGate uni+Master/3
Presence loop Output							2	112		=sGate uni+Master/3
Third parties	-A2:4V				RD		1	113		=sGate uni+Master/6
Third parties	-A2:2				OR		2	114		=sGate uni+Master/6
Third parties							1	115		=sGate uni+Master/6
Third parties	-A2:1				GN		2	116		=sGate uni+Master/6
Loop 3	-LUS-3:	SLUITVEILIGHEID					1	117		=sGate uni+Master/6
Loop 4	-LUS-3:	SLUITVEILIGHEID					2	118		=sGate uni+Master/6
Loop 4	-LUS-4:	SLUITVEILIGHEID					1	119		=sGate uni+Master/6
Loop 4	-LUS-4:	SLUITVEILIGHEID					2	120		=sGate uni+Master/6
Controls	-DERD1:COM	COM					1	121		=sGate uni+Master/4
Controls	-DERD1:N.O.	OPENING INCOMING					2	122		=sGate uni+Master/4
Controls	-DERD1:N.O.	OPENING OUTGOING					3	123		=sGate uni+Master/4
Controls	-DERD1:COM	COM*					1	124		=sGate uni+Master/4
Controls	-DERD1:N.O.	SEMI OPENING					2	125		=sGate uni+Master/4
Controls	-DERD1:N.C.	STOP*					3	126		=sGate uni+Master/4
Photocell transmitter 1	-FCT1:+	+	_FCZ1	5x0,14 mm	BN		1	127		=sGate uni+Master/5
	-FCT1:~	~	_FCZ1	5x0,14 mm	ZW					
Photocell transmitter 1	-FCT1:-	-	_FCZ1	5x0,14 mm	BL		2	128		=sGate uni+Master/5
	-FCT1:WT	+	_FCZ1	5x0,14 mm	WT					

Terminals connection list

X1A

From	Connection code	Function text	Cable No.	Cable Type.	Cable Wire	Bridge	Level	Bridge	Page
	-FCT1:GS	+	_FCZ1	5x0,14 mm	GS				
Photocell transmitter 1						3	129		=sGate uni+Master/5
Photocell receiver 2	-FCR2:+	+	_FCO2	5x0,14 mm	BN	1	130		=sGate uni+Master/5
	-FCR2:GS	Photocell receiver 2	_FCO2	5x0,14 mm	GS				
Photocell receiver 2	-FCR2:-	-	_FCO2	5x0,14 mm	BL	2	131		=sGate uni+Master/5
	-FCR2:WT	Photocell receiver 2	_FCO2	5x0,14 mm	WT				
Photocell receiver 2	-FCR2:~	~	_FCO2	5x0,14 mm	ZW	3	132		=sGate uni+Master/5
Photocell transmitter 3	-FCT3:+	+	_FCZ3	5x0,14 mm	BN	1	133		=sGate uni+Master/5
	-FCT3:~	~	_FCZ3	5x0,14 mm	ZW				
	-FCT3:WT	Photocell transmitter 3	_FCZ3	5x0,14 mm	WT				
Photocell transmitter 3	-FCT3:-	-	_FCZ3	5x0,14 mm	BL	2	134		=sGate uni+Master/5
	-FCT3:GS	+	_FCZ3	5x0,14 mm	GS				
Photocell transmitter 3						3	135		=sGate uni+Master/5
Traffic light incoming	-VL1.1:RD	Red	_VL1	7x0.14 mm²	RS	1	136		=sGate uni+Master/6
	+Slave-X2B:111	Traffic light incoming							
Traffic light incoming	-VL1.1:GN	Green	_VL1	7x0.14 mm²	WT	2	137		=sGate uni+Master/6
	+Slave-X2B:112	Traffic light incoming							
Traffic light incoming	-VL1.1:-0V	-0V	_VL1	7x0.14 mm²	BL	3	138		=sGate uni+Master/6
	+Slave-X2B:113	Traffic light incoming							
Traffic light outgoing	-VL2.1:RD	Red	VL2	7x0.14 mm²	RS	1	139		=sGate uni+Master/6
	+Slave-X2B:115	Traffic light outgoing							
Traffic light outgoing	-VL2.1:GN	Green	VL2	7x0.14 mm²	WT	2	140		=sGate uni+Master/6
	+Slave-X2B:116	Traffic light outgoing							
Traffic light outgoing	-VL2.1:-0V	-0V	VL2	7x0.14 mm²	BL	3	141		=sGate uni+Master/6
	+Slave-X2B:117	Traffic light outgoing							
Third parties	-X1A:143	Third parties			RD	1	142		=sGate uni+Master/6
	-X1A:144	Loop 3			RD				
Third parties	-X1A:142	Third parties			RD	2	143		=sGate uni+Master/6

Industrialization_klemmenaansluitlijst_Voorwaardelijk

Terminals connection list

X1A

From	Connection code	Function text	Cable No.	Cable Type.	Cable Wire	Bridge	Level		Bridge	Page
Loop 3	-X1A:142	Third parties			RD	'	3	144	'	=sGate uni+Master/6

Rev. date:	27-07-2022	**Type:**	Master	**Project name**	dr-unit diverse			**Page title:**	**Page**
Version no:	4.0								
Drawn by:	WWI	**Language:**	en_EN	**Group code**	sGate uni	**Description**	Master/Slave	"+Master-X1A" Terminals Connection frame	14 / 15

Terminals connection list

X1B

From	Connection code	Function text	Cable No.	Cable Type.	Cable Wire	Bridge	Level		Bridge	Page
	-DC1:N.C.		_DC1	4x0,14 mm²	WT1	'	1	101	'	=sGate uni+Master/8
	-DC1:COM		_DC1	4x0,14 mm²	WT2	'	2	102	'	=sGate uni+Master/8
	-DC2:COM		_DC2	4x0,14 mm²	WT1	'	1	103	'	=sGate uni+Master/8
	-DC2:N.C.		_DC2	4x0,14 mm²	WT2	'	2	104	'	=sGate uni+Master/8
	+Slave-X2B:101					'	1	105	'	=sGate uni+Master/8
	+Slave-X2B:103					'	2	106	'	=sGate uni+Master/8
	+Slave-X2B:107					'	1	107	'	=sGate uni+Master/8
	+Slave-X2B:108					'	2	108	'	=sGate uni+Master/8
Spare						'	1	109	'	=sGate uni+Master/8
	+Slave-X2B:109					'	2	110	'	=sGate uni+Master/8

Type: Slave

Group: sGate uni Master/Slave

Version no: 4.0

Language: en_EN

Rev. date:	27-07-2022	**Type:**	Slave	**Project name**	dr-unit diverse			**Page title:**	**Page**
Version no:	4.0								
Drawn by:	WWI	**Language:**	en_EN	**Group code**	sGate uni	**Description**	Master/Slave	Title Sheet / Front Sheet	1 / 12

Index

[SLAVE]

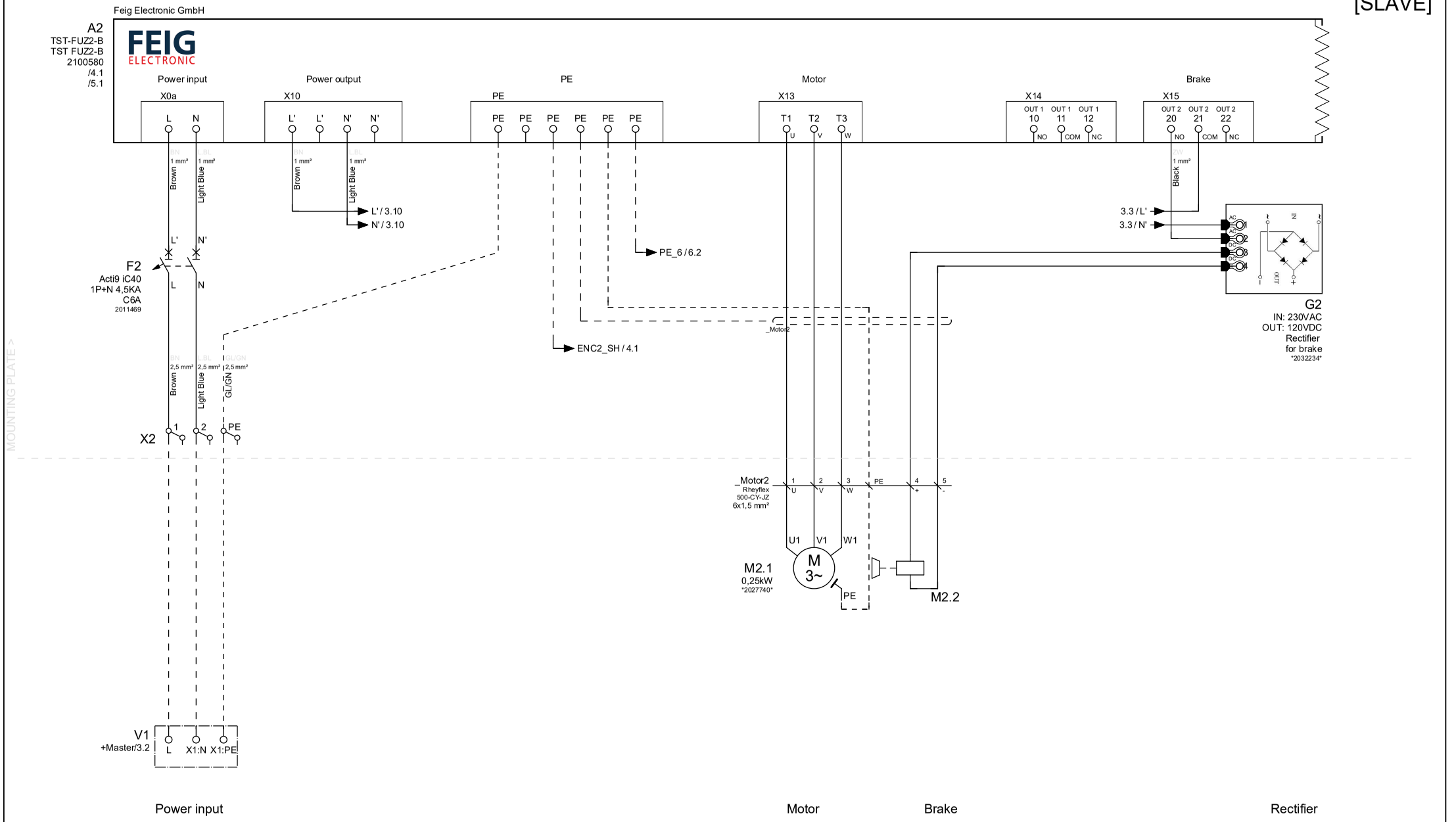

Rev. date:	27-07-2022	**Type:**	Slave	**Project name**	dr-unit diverse			**Page title:**	**Page**
Version no:	4.0								
Drawn by:	WWI	**Language:**	en_EN	**Group code**	sGate uni	**Description**	Master/Slave	TST FUZ2-B	3 / 12

Eplan version: 2.9.4

[SLAVE]

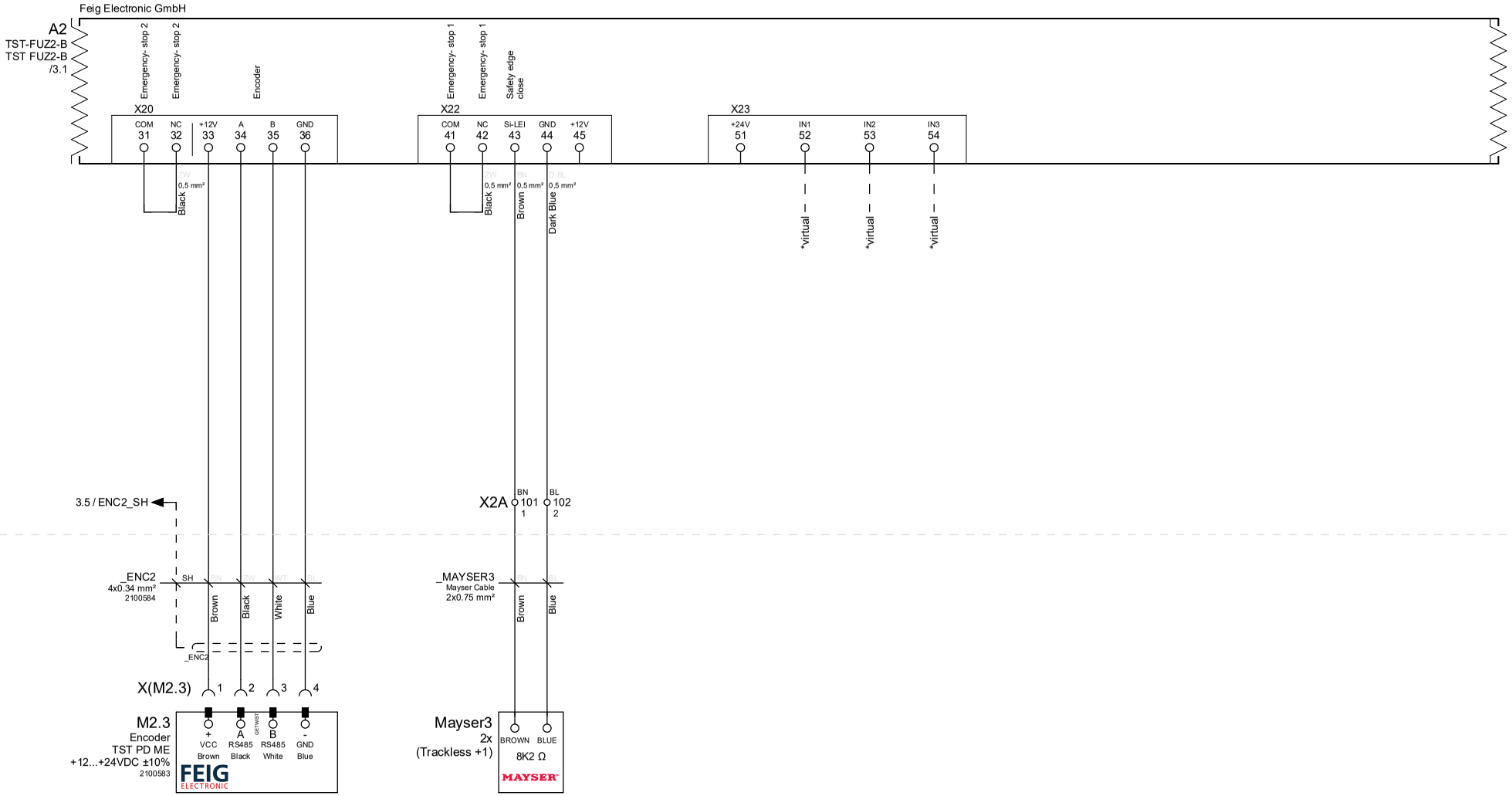

Encoder

Safety edge close

Rev. date:	27-07-2022	**Type:**	Slave	**Project name**	dr-unit diverse		**Page title:**	**Page**
Version no:	4.0							
Drawn by:	WWI	**Language:**	en_EN	**Group code**	sGate uni	**Description** Master/Slave	TST FUZ2-B	4 / 12

Eplan version: 2.9.4

[SLAVE]

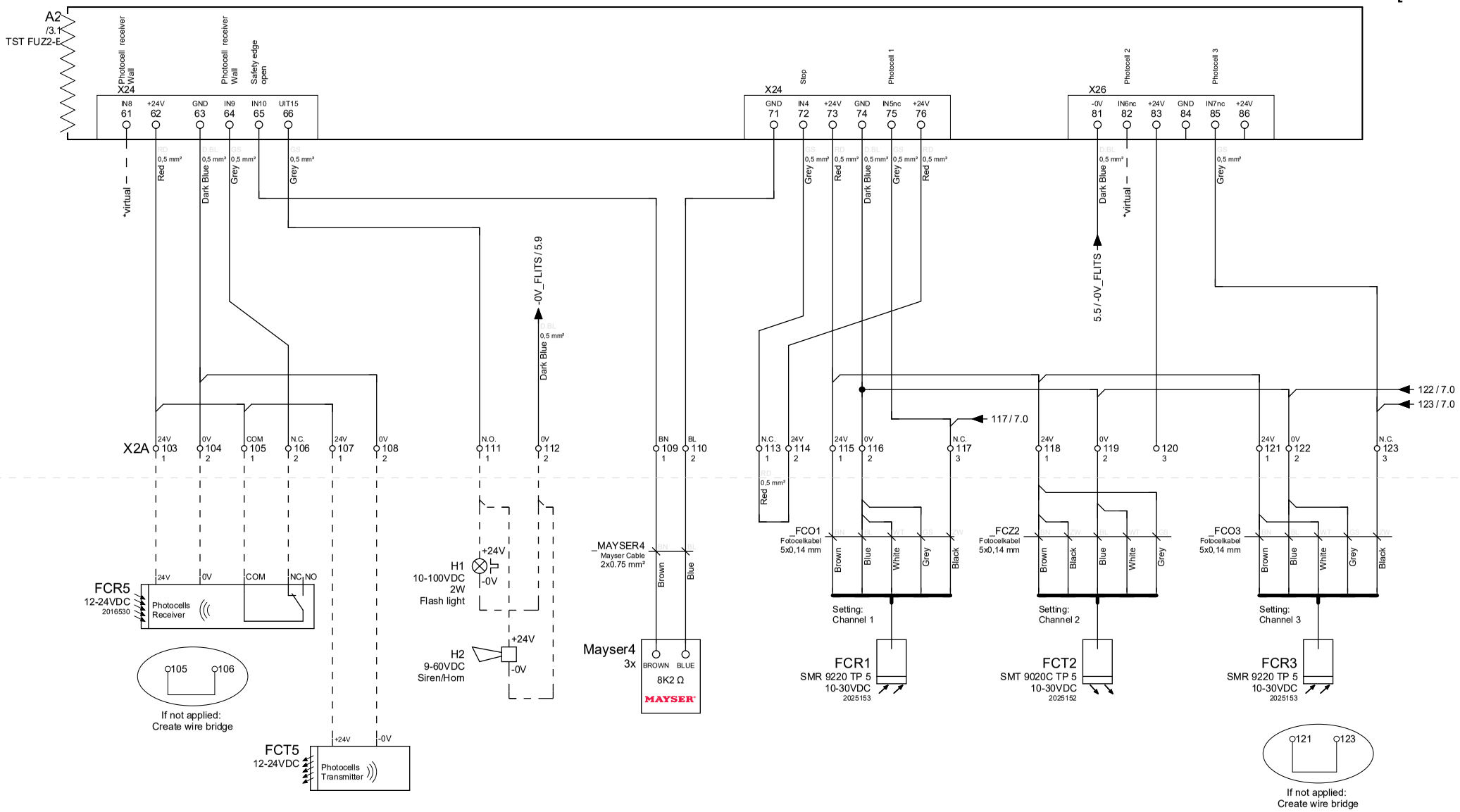

Photocell receiver 5 wall | Photocell transmitter 5 wall | Flashlight / Siren | Safety edge open | Stop | Photocell receiver 1 | Photocell transmitter 2 | Photocell receiver 3

Rev. date: 27-07-2022	**Type:** Slave	**Project name** dr-unit diverse		**Page title:**			**Page**
Version no: 4.0							
Drawn by: WWI	**Language:** en_EN	**Group code** sGate uni	**Description** Master/Slave	TST FUZ2-B			5 / 12

Eplan version: 2.9.4

Communication board TST FRFUZ-COM

[SLAVE]

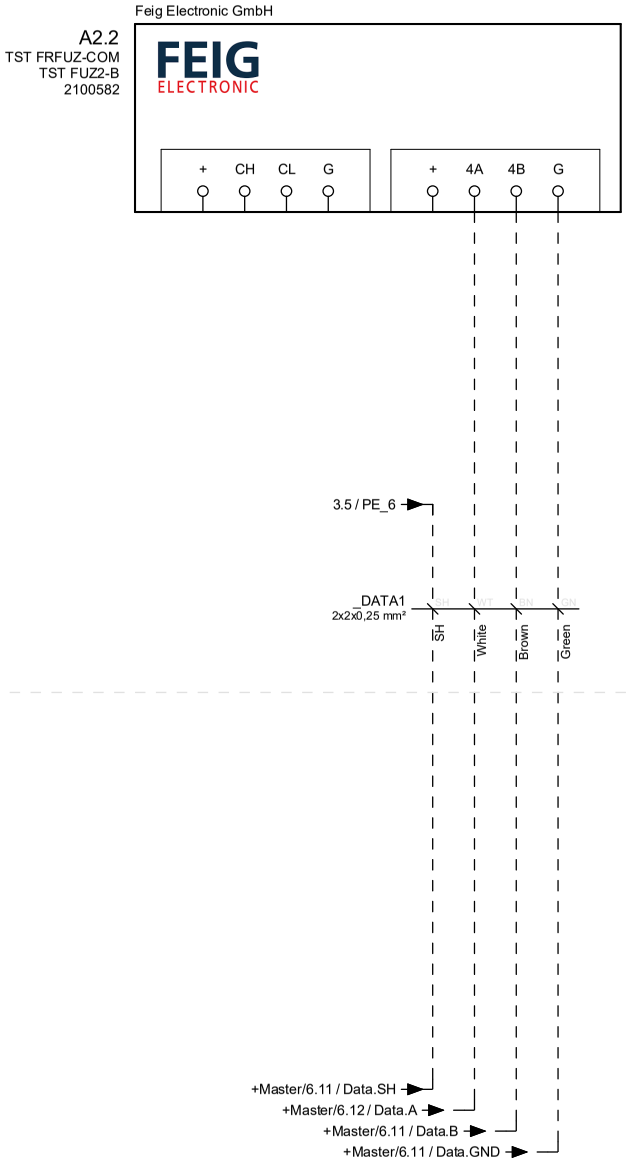

Rev. date: 27-07-2022 **Version no:** 4.0 **Drawn by:** WWI	**Type:** Slave **Language:** en_EN	**Project name** dr-unit diverse **Group code** sGate uni	**Description** Master/Slave	**Page title:** Communication board TST FRFUZ-COM	HERAS	**Page** 6 / 12

[SLAVE]

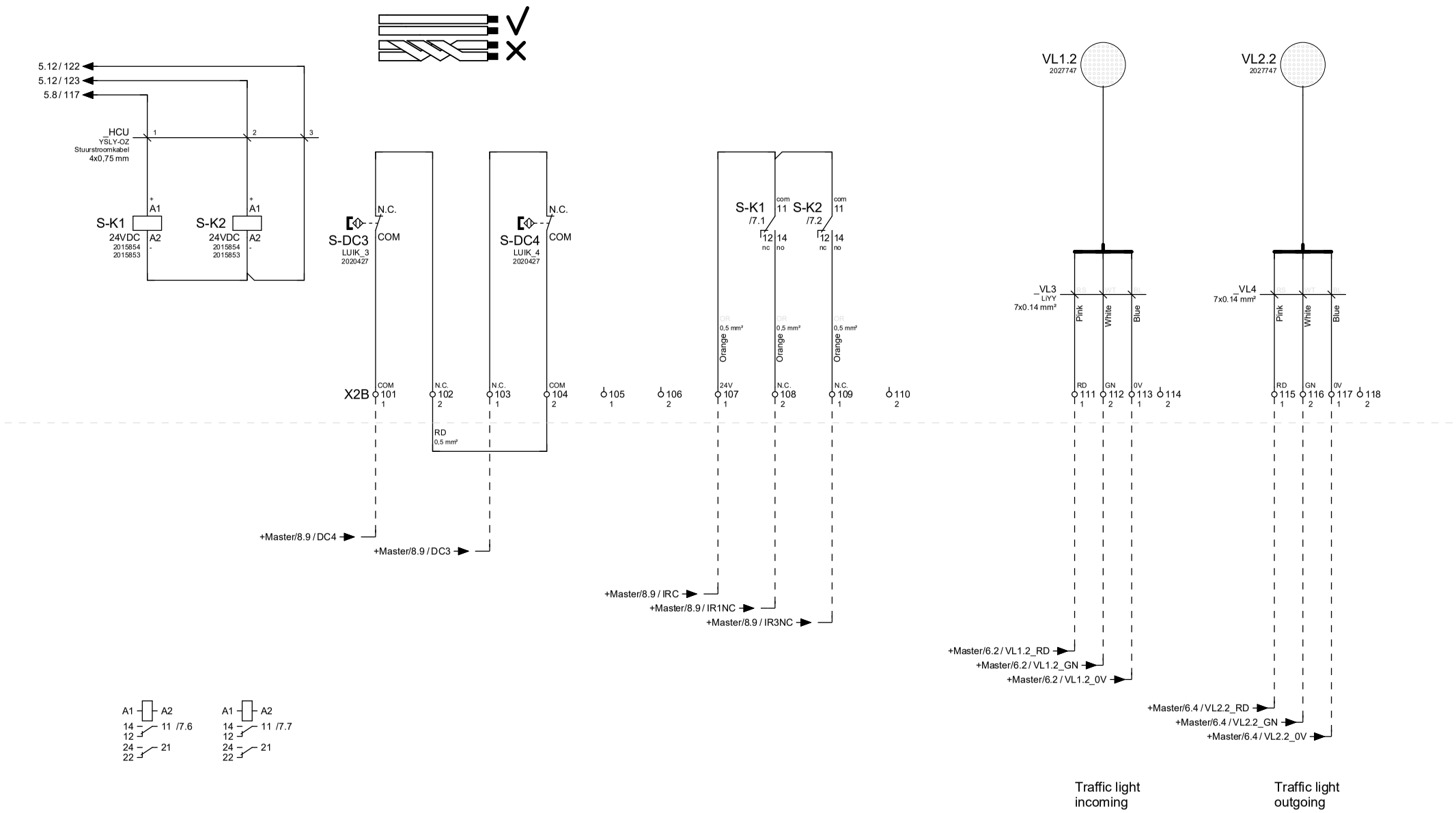

Rev. date: 27-07-2022	**Type:** Slave	**Project name** dr-unit diverse		**Page title:**		**Page**
Version no: 4.0						
Drawn by: WWI	**Language:** en_EN	**Group code** sGate uni	**Description** Master/Slave	Mounting plate for HCU / traffic light(s)		7 / 12

Eplan version: 2.9.4

[SLAVE]

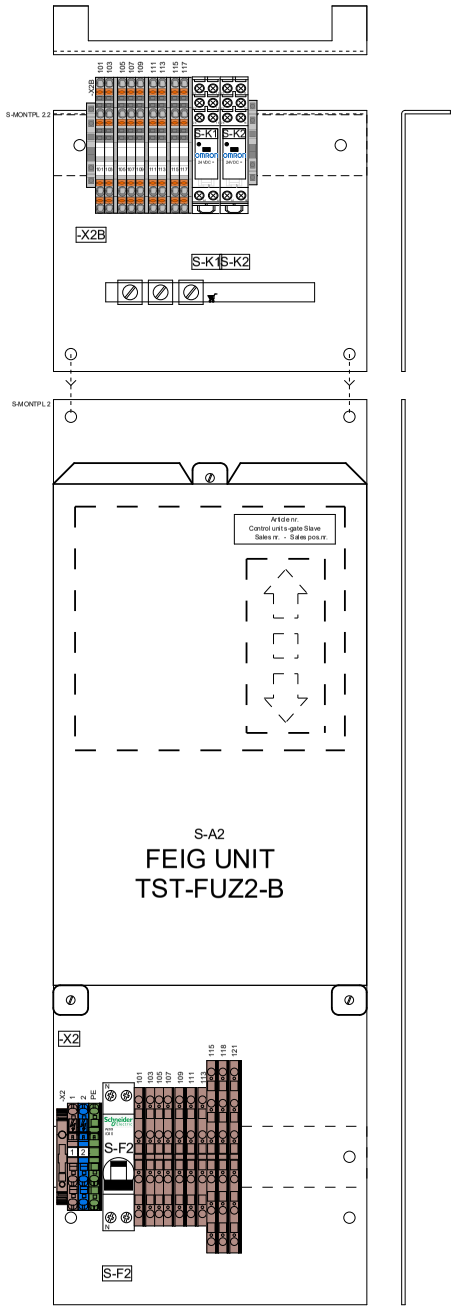

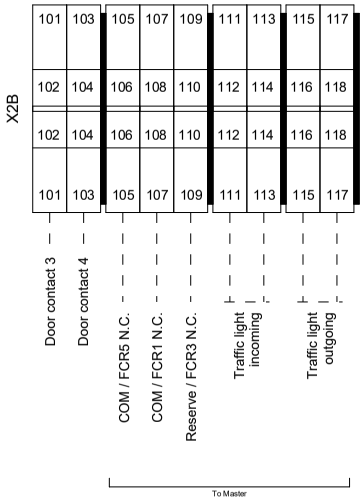

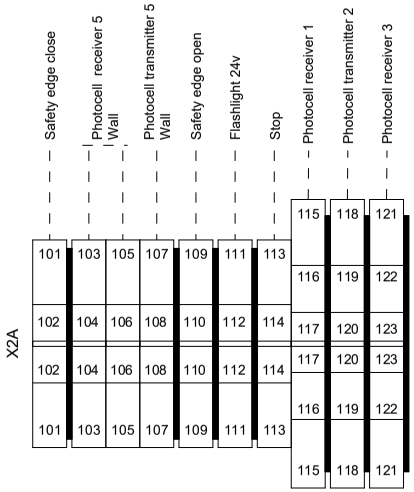

Rev. date: 27-07-2022	**Type:** Slave	**Project name** dr-unit diverse		**Page title:**			**Page**
Version no: 4.0							
Drawn by: WWI	**Language:** en_EN	**Group code** sGate uni	**Description** Master/Slave	View mounting plate			8 / 12

Industrialization_klemmenaansluitlijst_Voorwaardelijk

Terminals connection list

X2

From	Connection code	Function text	Cable No.	Cable Type.	Cable Wire	Bridge	Level	Bridge	Page
Power input	-X1:L	Power input				'	1	'	=sGate uni+Slave/3
Power input	-X1:N	Power input				'	2	'	=sGate uni+Slave/3
Power input	-X1:PE					'	PE	'	=sGate uni+Slave/3

Terminals connection list

X2A

From	Connection code	Function text	Cable No.	Cable Type.	Cable Wire	Bridge	Level	Bridge	Page
Safety edge close	-Mayser3:	BROWN	_MAYSER3	2x0.75 mm²	BN		1 101		=sGate uni+Slave/4
Safety edge close	-Mayser3:	BLUE	_MAYSER3	2x0.75 mm²	BL		2 102		=sGate uni+Slave/4
Photocell receiver 5 wall	-FCR5:24V	Photocell receiver 5 wall					1 103		=sGate uni+Slave/5
Photocell receiver 5 wall	-FCR5:0V	Photocell receiver 5 wall					2 104		=sGate uni+Slave/5
Photocell receiver 5 wall	-FCR5:COM	Photocell receiver 5 wall					1 105		=sGate uni+Slave/5
Photocell receiver 5 wall	-FCR5:NC	Photocell receiver 5 wall					2 106		=sGate uni+Slave/5
Photocell transmitter 5 wall	-FCT5:+24V	Photocell transmitter 5 wall					1 107		=sGate uni+Slave/5
RESERVE	-FCT5:-0V	Photocell transmitter 5 wall					2 108		=sGate uni+Slave/5
Stop	-Mayser4:	BROWN	_MAYSER4	2x0.75 mm²	BN		1 109		=sGate uni+Slave/5
Stop	-Mayser4:	BLUE	_MAYSER4	2x0.75 mm²	BL		2 110		=sGate uni+Slave/5
Flashlight / Siren	-H1:+24V	Flash light					1 111		=sGate uni+Slave/5
	-H2:+24V	Siren/Horn							
Safety edge open	-H1:-0V	Flash light					2 112		=sGate uni+Slave/5
	-H2:-0V	Siren/Horn							
Stop	-X2A:114	Photocell receiver 1			RD		1 113		=sGate uni+Slave/5
Photocell receiver 1	-X2A:113	Stop			RD		2 114		=sGate uni+Slave/5
Photocell receiver 1	-FCR1:+	+	_FCO1	5x0,14 mm	BN		1 115		=sGate uni+Slave/5
Photocell receiver 1	-FCR1:-	-	_FCO1	5x0,14 mm	BL		2 116		=sGate uni+Slave/5
	-FCR1:WT	+	_FCO1	5x0,14 mm	WT				
	-FCR1:GS	=	_FCO1	5x0,14 mm	GS				
Photocell receiver 1	-FCR1:~	~	_FCO1	5x0,14 mm	ZW		3 117		=sGate uni+Slave/5
Photocell transmitter 2	-FCT2:+	+	_FCZ2	5x0,14 mm	BN		1 118		=sGate uni+Slave/5
	-FCT2:~	~	_FCZ2	5x0,14 mm	ZW				
	-FCT2:GS	+	_FCZ2	5x0,14 mm	GS				
Photocell transmitter 2	-FCT2:-	-	_FCZ2	5x0,14 mm	BL		2 119		=sGate uni+Slave/5
	-FCT2:WT	+	_FCZ2	5x0,14 mm	WT				
							3 120		=sGate uni+Slave/5
Photocell receiver 3	-FCR3:+	+	_FCO3	5x0,14 mm	BN		1 121		=sGate uni+Slave/5
	-FCR3:WT	-	_FCO3	5x0,14 mm	WT				
Photocell receiver 3	-FCR3:-	-	_FCO3	5x0,14 mm	BL		2 122		=sGate uni+Slave/5

Rev. date: 27-07-2022	**Type:** Slave	**Project name** dr-unit diverse		**Page title:**	**Page**
Version no: 4.0					
Drawn by: WWI	**Language:** en_EN	**Group code** sGate uni	**Description** Master/Slave	"+Slave-X2A" Terminals Connection frame	10 / 12

Terminals connection list

X2A

From	Connection code	Function text	Cable No.	Cable Type.	Cable Wire	Bridge	Level	Bridge	Page
	-FCR3:GS	Photocell receiver 3	_FCO3	5x0,14 mm	GS				
Photocell receiver 3	-FCR3:~	~	_FCO3	5x0,14 mm	ZW		3 123		=sGate uni+Slave/5

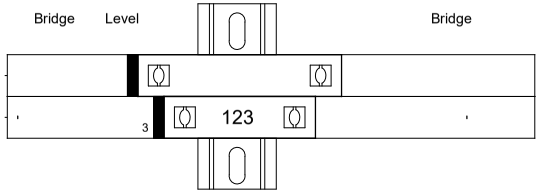

Rev. date: 27-07-2022 **Version no:** 4.0 **Drawn by:** WWI	**Type:** Slave **Language:** en_EN	**Project name** dr-unit diverse **Group code** sGate uni	**Description** Master/Slave	**Page title:** "+Slave-X2A" Terminals Connection frame	HERAS	**Page** 11 / 12

Terminals connection list

X2B

From	Connection code	Function text	Cable No.	Cable Type.	Cable Wire	Bridge	Level		Bridge	Page
	+Master-X1B:105						1	101		=sGate uni+Slave/7
	-X2B:104				RD		2	102		=sGate uni+Slave/7
	+Master-X1B:106						1	103		=sGate uni+Slave/7
	-X2B:102				RD		2	104		=sGate uni+Slave/7
Spare							1	105		=sGate uni+Slave/7
Spare							2	106		=sGate uni+Slave/7
	+Master-X1B:107						1	107		=sGate uni+Slave/7
	+Master-X1B:108						2	108		=sGate uni+Slave/7
	+Master-X1B:110						1	109		=sGate uni+Slave/7
Spare							2	110		=sGate uni+Slave/7
Traffic light incoming	+Master-X1A:136	Traffic light incoming					1	111		=sGate uni+Slave/7
Traffic light incoming	+Master-X1A:137	Traffic light incoming					2	112		=sGate uni+Slave/7
Traffic light incoming	+Master-X1A:138	Traffic light incoming					1	113		=sGate uni+Slave/7
Spare							2	114		=sGate uni+Slave/7
Traffic light outgoing	+Master-X1A:139	Traffic light outgoing					1	115		=sGate uni+Slave/7
Traffic light outgoing	+Master-X1A:140	Traffic light outgoing					2	116		=sGate uni+Slave/7
Traffic light outgoing	+Master-X1A:141	Traffic light outgoing					1	117		=sGate uni+Slave/7
Spare							2	118		=sGate uni+Slave/7

Type: Appendix

Group: sGate uni Master/Slave

Version no: 4.0

Language: en_EN

Index

Appendix: A | Input messages on display

Notification Master	Notification Slave	clamp description	Connection Feig	Terminal no.	Function	Location malfunction Master	Location malfunction Slave
E.000	E.000	Open	X502	-	Open key foil keyboard	X	X
E.050	E.050	Stop	X502	-	Stop button foil keyboard	X	X
E.090	E.090	Closed	X502	-	Close key foil keyboard	X	X
E.101	E.13a IN 3A *Virtual*	IN1	52	X1A:122	Open ingoing	X	
E.102	E.13b IN 3B *Virtual*	IN2	53	X1A:123	Open outgoing	X	
E.103	E.13c IN 3C *Virtual*	IN3	54	X1A:125	Semi opening	X	
E.104	E.13d IN 3D *Virtual*	IN4	72	X1A:126	Stop	X	
E.13e IN 3E *Virtual*	E.105	IN5	75	X2A:117	Photocell receiver 1		X
E.106	E.13e IN 3E *Virtual*	IN6	82	X1A:132	Photocell receiver 2	X	
E.13f IN 3F *Virtual*	E.107	IN7	85	X2A:123	Photocell receiver 3		X
E.108	E.115 IN 15 *Virtual*	IN8	61	X1A:106	Photocell receiver 4 wall	X	
E.115 IN 15 *Virtual*	E.109	IN9	64	X2A:106	Photocell receiver 5 wall		X
E.380	E.111 IN 11 *Virtual*	IN10	65	X1A:109	Safety edge open	X	
E.360	E.112 IN 12 *Virtual*	Si-LEI	43	X1A:101	Safety edge close	X	
E.111 IN 11 *Virtual*	E.380	IN10	65	X2A:109	Safety edge open		X
E.112 IN 12 *Virtual*	E.360	Si-LEI	43	X2A:101	Safety edge close		X
E.113	E 113 IN 13 *Virtual*	IN13	Det3	X1A:117-118	Column side safety loop	X	
E.114	E 114 IN 14 *Virtual*	IN14	Det4	X1A:119-120	Leaf side safety loop	X	
E.121	-	IN21	331	X1A:143	Emergency open	X	
E.122	-	IN22	334	X1A:144	Emergency close	X	
E.123	-	IN23	341	-	Opening dead man's	X	
E.124	-	IN24	361	-	Closing dead man's	X	
E.125	-	IN25	362	-	Normal closing	X	

Appendix: B | Connecting photocells configuration

Gray & White Control The Channel

Setting: Channel 1

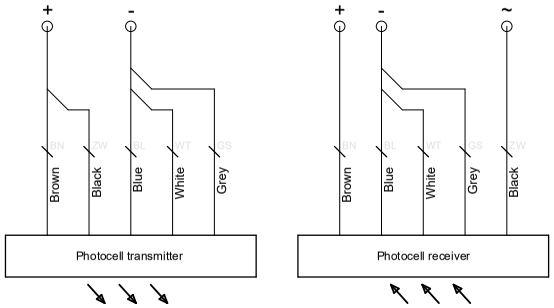

Setting: Channel 2

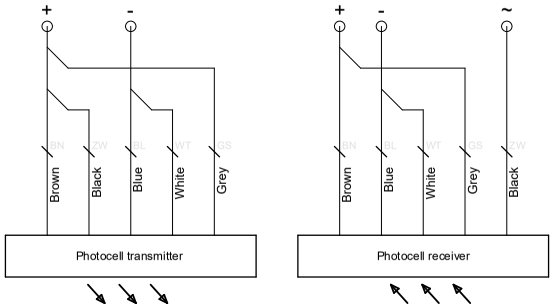

Setting: Channel 3

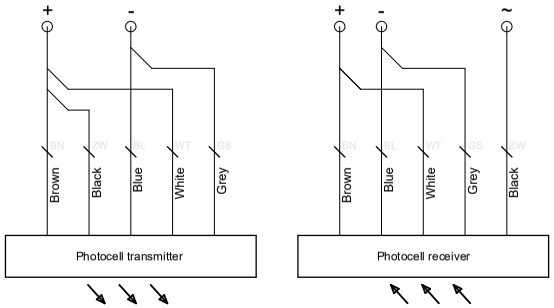

Setting: Channel 4

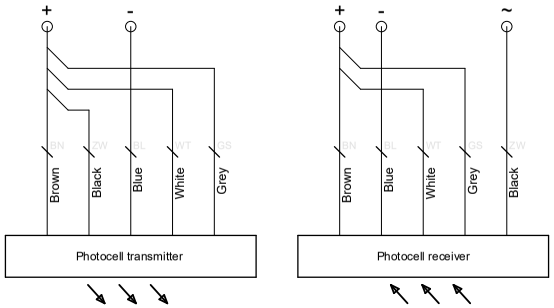

Appendix: C | Alternative without loops

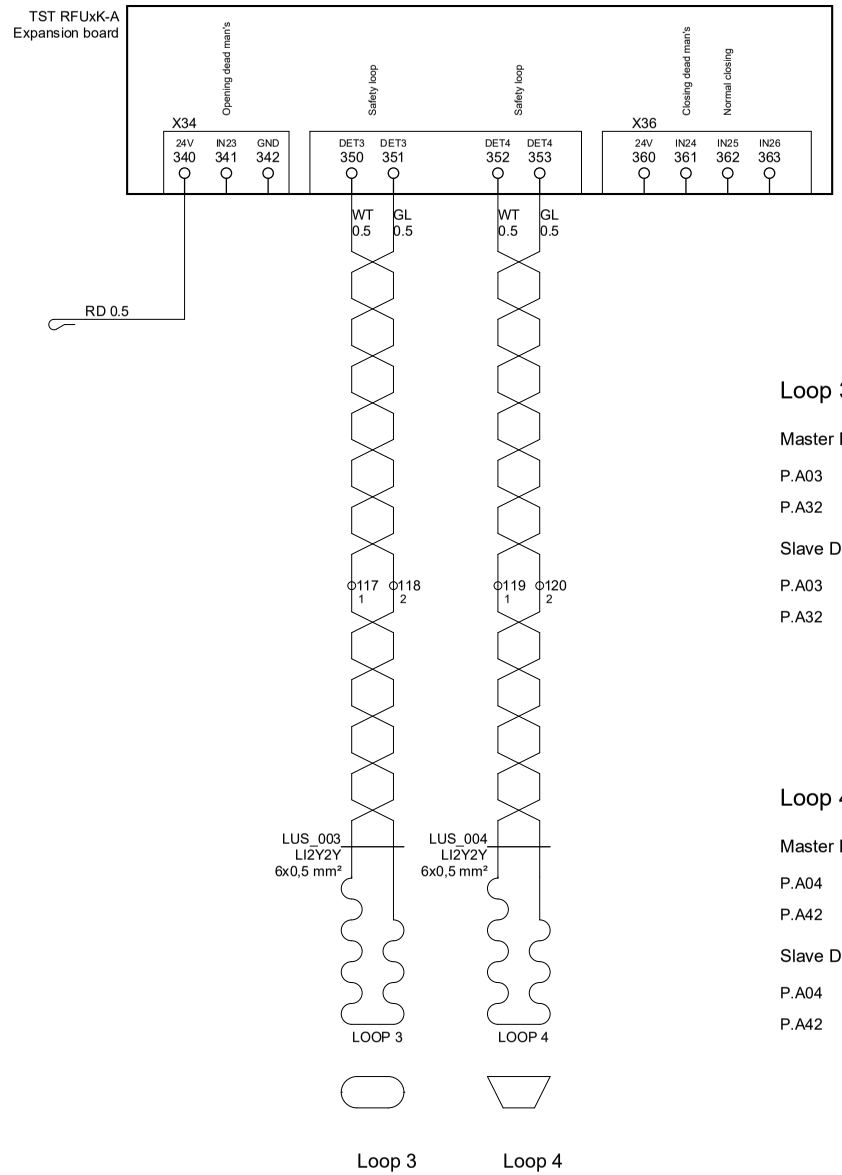

Standard with safety loops

Loop 3

Loop 3		→	Alternative [in23]	
Master Default			Master Alternatief	
P.A03	1501		P.A03	1803
P.A32	0		P.A32	1 (N.C.)
Slave Default			Slave Alternatief	
P.A03	1501		P.A03	1803
P.A32	0		P.A32	1 (N.C.)

PASSWORD LEVEL: 3

Loop 4

Loop 4		→	Alternative [in24]	
Master Default			Master Alternatief	
P.A04	1502		P.A04	1804
P.A42	0		P.A42	1 (N.C.)
Slave Default			Slave Alternatief	
P.A04	1502		P.A04	1804
P.A42	0		P.A42	1 (N.C.)

PASSWORD LEVEL: 3

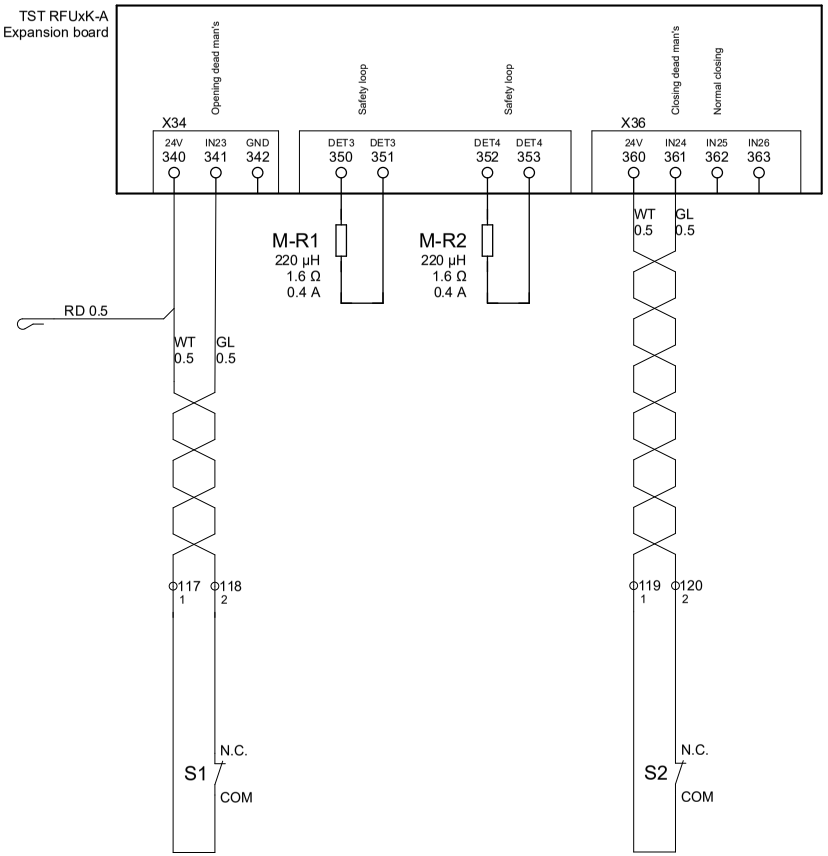

Alternative without safety loops

Rev. date:	27-07-2022	**Type:**	Appendix	**Project name**	dr-unit diverse	**Page title:**	**Page**
Version no:	4.0					Appendix: C | Alternative without loops	C / 5
Drawn by:	WWI	**Language:**	en_EN	**Group code**	sGate uni **Description** Master/Slave		

Type: Standalone

Group: sGate uni sa Standalone

Version no: 4.0

Language: en_EN

Index

[STANDALONE]

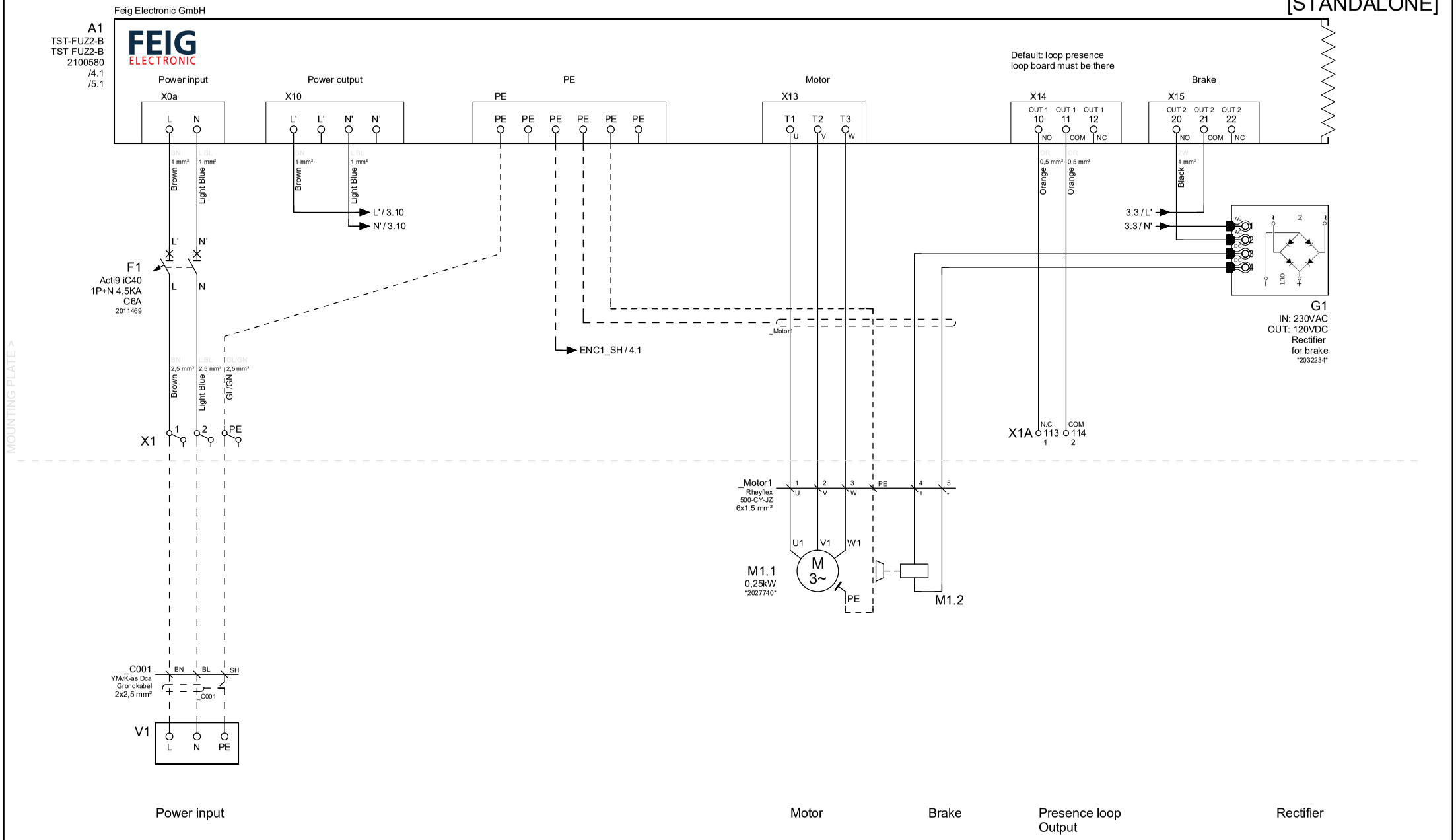

Rev. date:	27-07-2022	**Type:**	Standalone	**Project name**	dr-unit diverse			**Page title:**	**Page**
Version no:	4.0								
Drawn by:	WWI	**Language:**	en_EN	**Group code**	sGate uni sa	**Description**	Standalone	TST FUZ2-B	3 / 15

[STANDALONE]

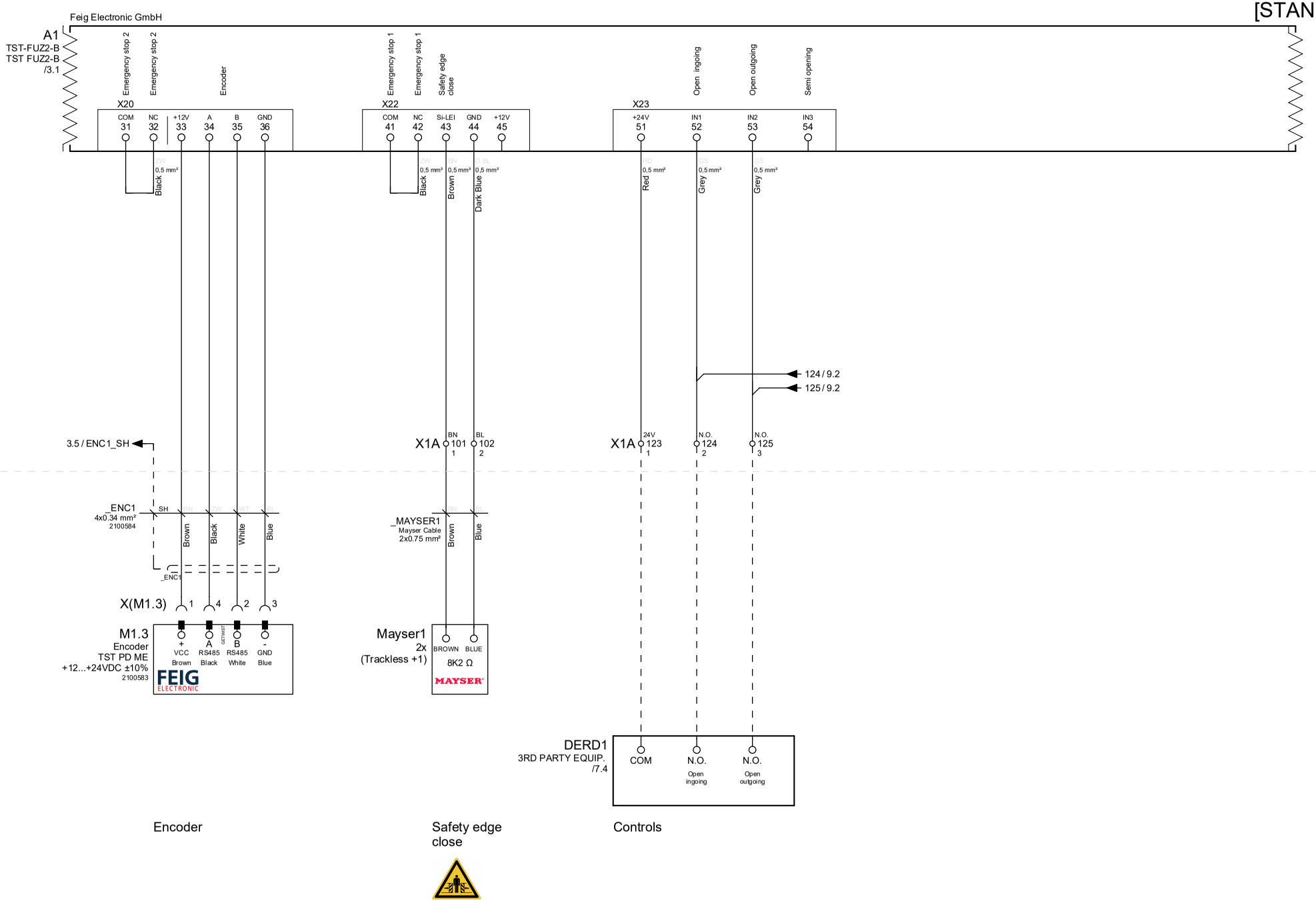

Rev. date:	27-07-2022	**Type:**	Standalone	**Project name**	dr-unit diverse			**Page title:**	**Page**
Version no:	4.0								
Drawn by:	WWI	**Language:**	en_EN	**Group code**	sGate uni sa	**Description**	Standalone	TST FUZ2-B	4 / 15

[STANDALONE]

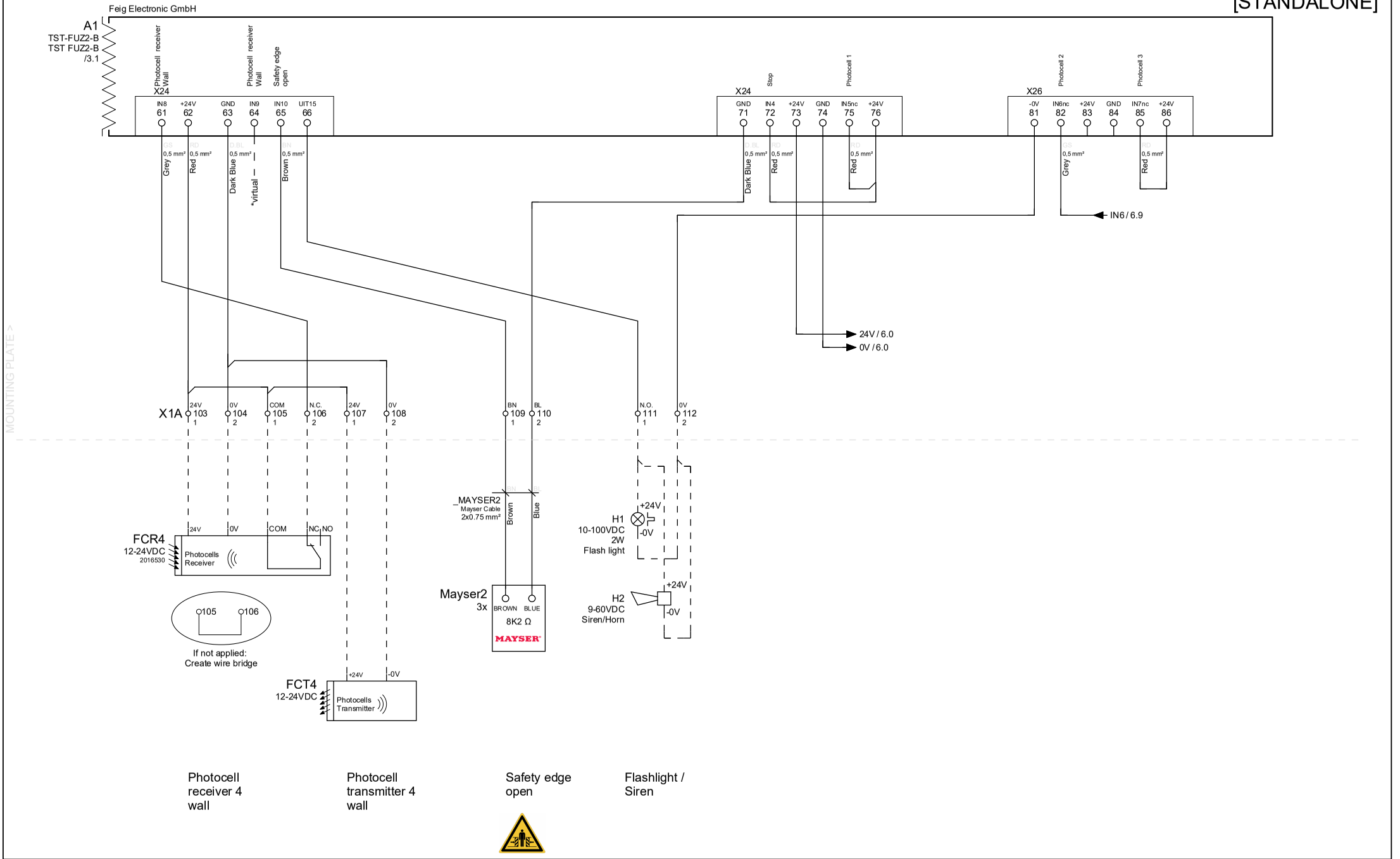

Rev. date:	27-07-2022	**Type:**	Standalone	**Project name**	dr-unit diverse		**Page title:**		**Page**
Version no:	4.0								
Drawn by:	WWI	**Language:**	en_EN	**Group code**	sGate uni sa	**Description**	Standalone	TST FUZ2-B	5 / 15

Eplan version: 2.9.4

[STANDALONE]

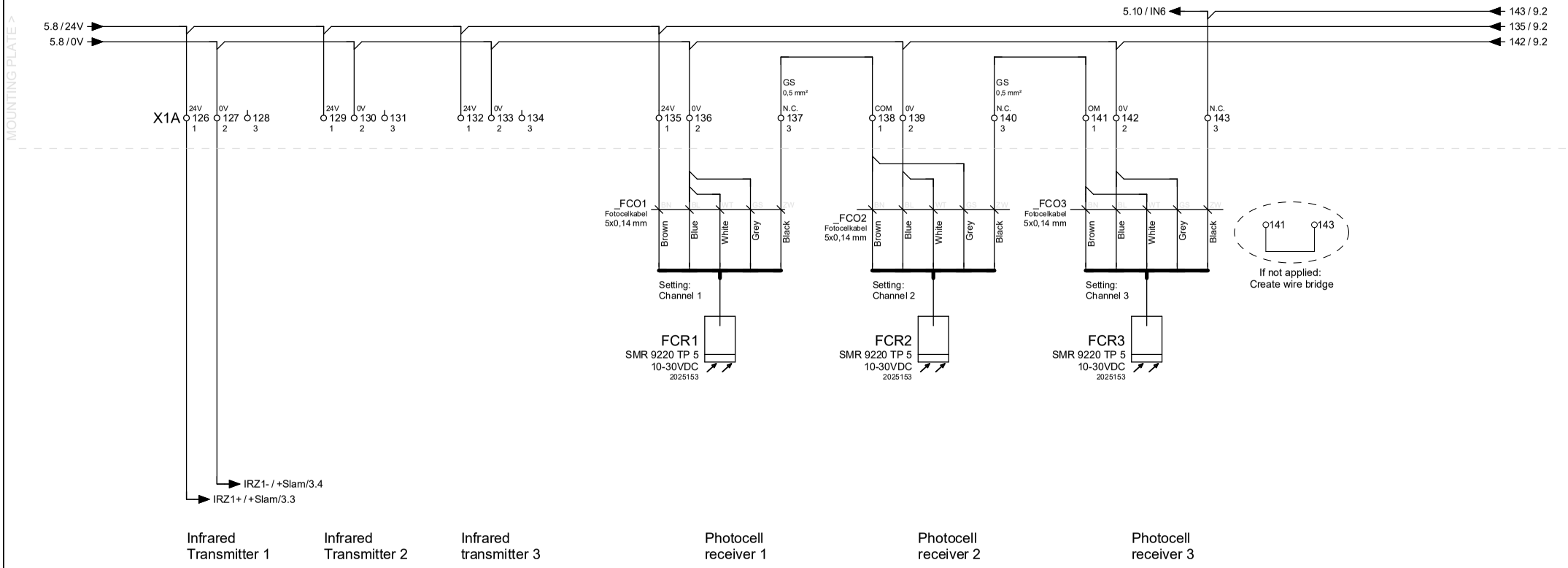

Rev. date:	27-07-2022	**Type:**	Standalone	**Project name**	dr-unit diverse			**Page title:**	**Page**
Version no:	4.0								
Drawn by:	WWI	**Language:**	en_EN	**Group code**	sGate uni sa	**Description**	Standalone	Photocells	6 / 15

Eplan version: 2.9.4

Expansion board TST-FUZ-xK

[STANDALONE]

Feig Electronic GmbH

A1.2
TST RFUxK-A
TST RFUxK-A
2100581

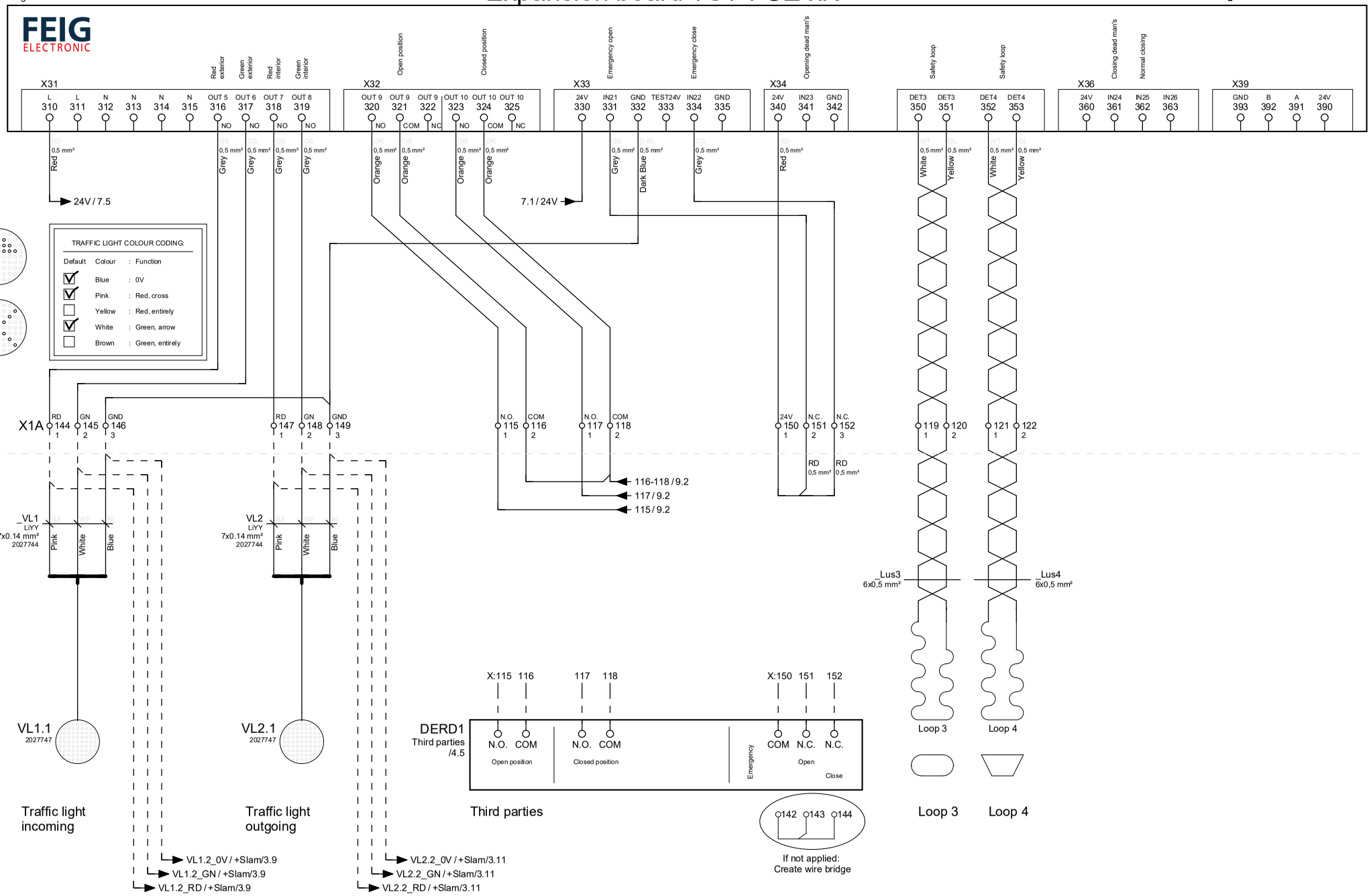

Rev. date:	27-07-2022	**Type:**	Standalone	**Project name**	dr-unit diverse			**Page title:**	**Page**
Version no:	4.0								
Drawn by:	WWI	**Language:**	en_EN	**Group code**	sGate uni sa	**Description**	Standalone	Expansion board TST-FUZ-xK	7 / 15

Eplan version: 2.9.4

TST SUVEK2-A, 2 channel detector

[STANDALONE]

Feig Electronic GmbH

A1.3
TST SUVEK2-A
2100586

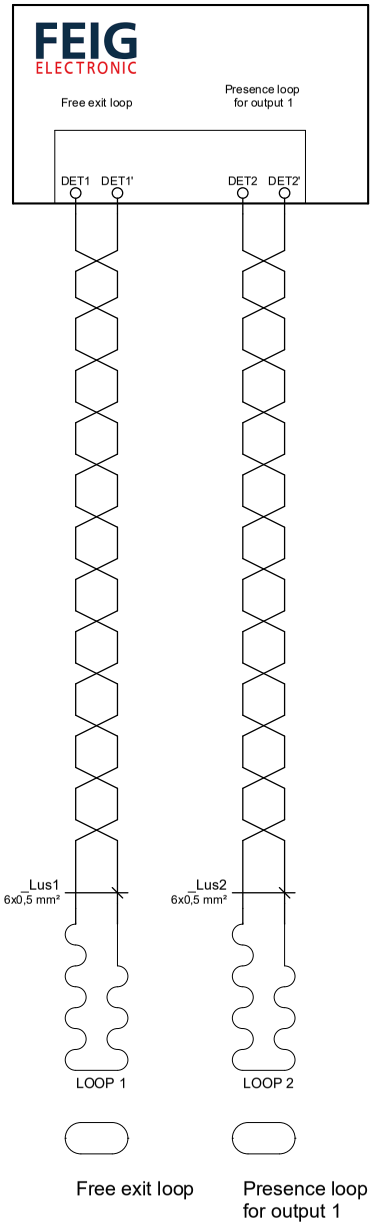

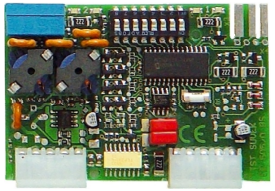

Rev. date:	27-07-2022	**Type:**	Standalone	**Project name**	dr-unit diverse			**Page title:**	**Page**
Version no:	4.0								
Drawn by:	WWI	**Language:**	en_EN	**Group code**	sGate uni sa	**Description**	Standalone	TST SUVEK2-A 2 channel detector optional*	8 / 15

[STANDALONE]

Heras B.V.

A3
Heras Cloud Unit
HCU
24V
2032274

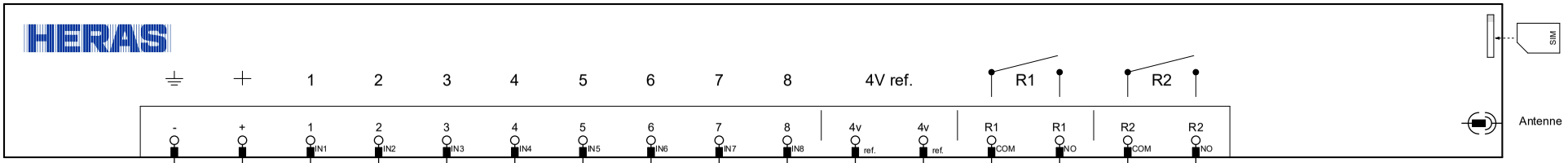

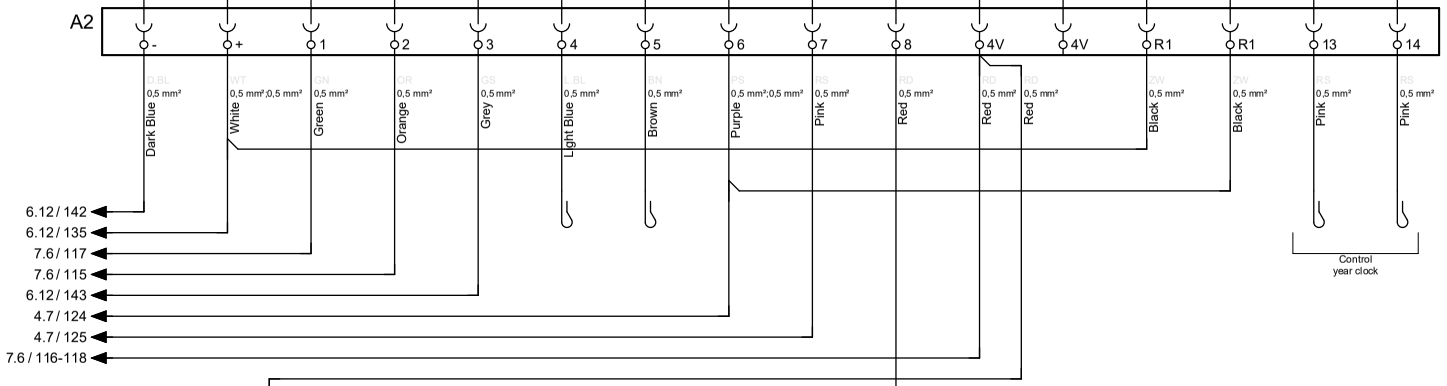

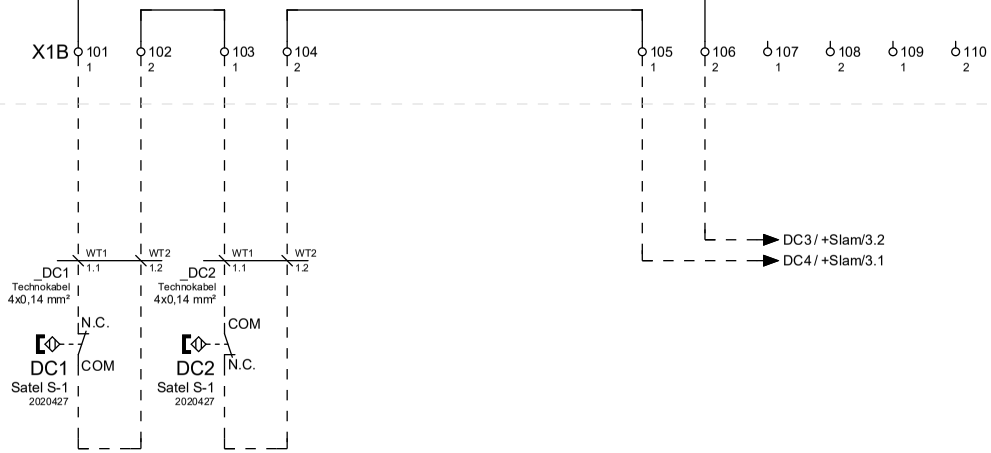

* Configuration	
1	Gate Closed
2	Gate Open
3	Photocell 1
4	Photocell 2
5	Photocell 3
6	Open ingoing
7	Open outgoing
8	Notification Hatch(s) open

Rev. date:	27-07-2022	**Type:**	Standalone	**Project name**	dr-unit diverse	**Page title:**	**Page**
Version no:	4.0						
Drawn by:	WWI	**Language:**	en_EN	**Group code**	sGate uni sa	**Description** Standalone	Heras Cloud Unit (HCU)	9 / 15

Eplan version: 2.9.4

[STANDALONE]

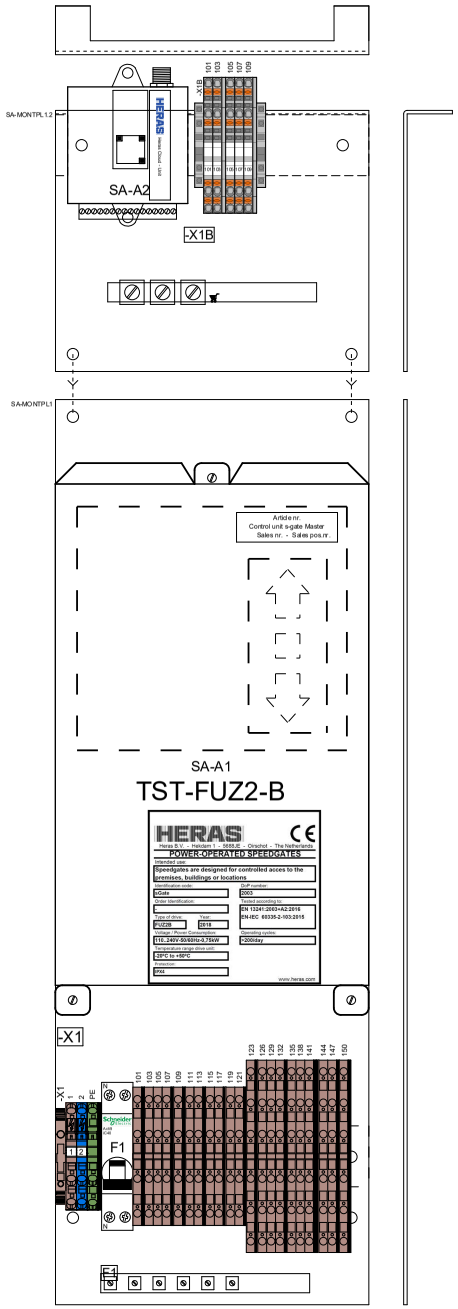

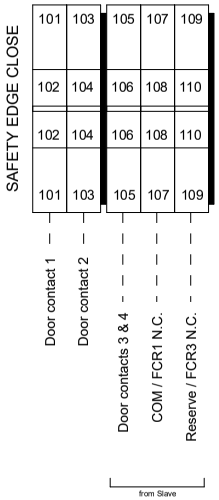

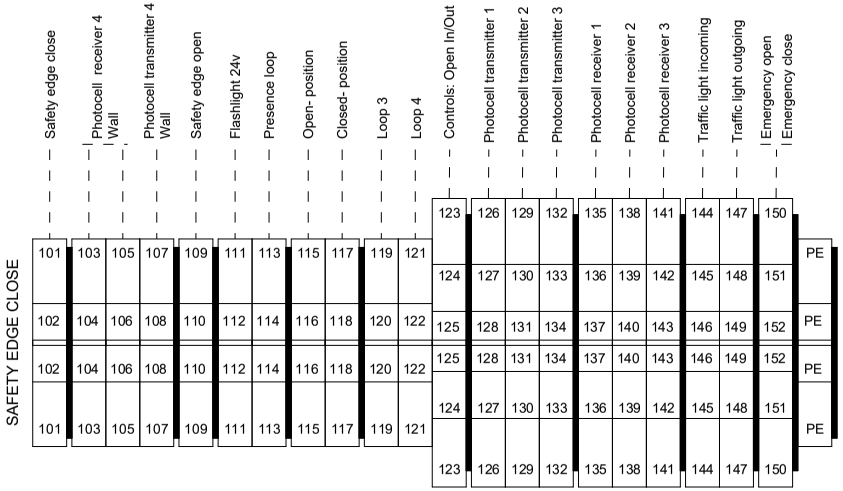

Rev. date:	27-07-2022	**Type:**	Standalone	**Project name**	dr-unit diverse	**Page title:**	**Page**
Version no:	4.0					View mounting plate	10 / 15
Drawn by:	WWI	**Language:**	en_EN	**Group code**	sGate uni sa	**Description** Standalone	

Industrialization_klemmenaansluitlijst_Voorwaardelijk

Terminals connection list

X1

From	Connection code	Function text	Cable No.	Cable Type.	Cable Wire	Bridge	Level	Bridge	Page
Power input	-V1:L	Power input	_C001	2x2,5 mm²	BN	'	1	'	=sGate uni sa+Standalone/3
Power input	-V1:N	Power input	_C001	2x2,5 mm²	BL	'	2	'	=sGate uni sa+Standalone/3
Power input	-V1:PE		_C001	2x2,5 mm²	SH	'	PE	'	=sGate uni sa+Standalone/3

Terminals connection list

X1A

From	Connection code	Function text	Cable No.	Cable Type.	Wire	Bridge	Level		Bridge	Page
Safety edge close	-Mayser1:	BROWN	_MAYSER1	2x0.75 mm²	BN		1	101		=sGate uni sa+Standalone/4
Safety edge close	-Mayser1:	BLUE	_MAYSER1	2x0.75 mm²	BL		2	102		=sGate uni sa+Standalone/4
Photocell receiver 4 wall	-FCR4:24V	Photocell receiver 4 wall					1	103		=sGate uni sa+Standalone/5
Photocell receiver 4 wall	-FCR4:0V	Photocell receiver 4 wall					2	104		=sGate uni sa+Standalone/5
Photocell receiver 4 wall	-FCR4:COM	Photocell receiver 4 wall					1	105		=sGate uni sa+Standalone/5
Photocell receiver 4 wall	-FCR4:NC	Photocell receiver 4 wall					2	106		=sGate uni sa+Standalone/5
Photocell transmitter 4 wall	-FCT4:+24V	Photocell transmitter 4 wall					1	107		=sGate uni sa+Standalone/5
Photocell transmitter 4 wall	-FCT4:-0V	Photocell transmitter 4 wall					2	108		=sGate uni sa+Standalone/5
Safety edge open	-Mayser2:	BROWN	_MAYSER2	2x0.75 mm²	BN		1	109		=sGate uni sa+Standalone/5
Flashlight / Siren	-Mayser2:	BLUE	_MAYSER2	2x0.75 mm²	BL		2	110		=sGate uni sa+Standalone/5
Flashlight / Siren	-H1:+24V	Flash light					1	111		=sGate uni sa+Standalone/5
	-H2:+24V	Siren/Horn								
Flashlight / Siren	-H1:-0V	Flash light					2	112		=sGate uni sa+Standalone/5
	-H2:-0V	Siren/Horn								
Presence loop Output							1	113		=sGate uni sa+Standalone/3
Presence loop Output							2	114		=sGate uni sa+Standalone/3
Third parties	-A2:2				OR		1	115		=sGate uni sa+Standalone/7
Third parties							2	116		=sGate uni sa+Standalone/7
Third parties	-A2:1				GN		1	117		=sGate uni sa+Standalone/7
Third parties	-A2:4V				RD		2	118		=sGate uni sa+Standalone/7
Loop 3	-LUS-3:	SLUITVEILIGHEID					1	119		=sGate uni sa+Standalone/7
Loop 4	-LUS-3:	SLUITVEILIGHEID					2	120		=sGate uni sa+Standalone/7
Loop 4	-LUS-4:	SLUITVEILIGHEID					1	121		=sGate uni sa+Standalone/7
Loop 4	-LUS-4:	SLUITVEILIGHEID					2	122		=sGate uni sa+Standalone/7
Controls	-DERD1:COM	COM					1	123		=sGate uni sa+Standalone/4
Controls	-DERD1:N.O.	OPENING INCOMING					2	124		=sGate uni sa+Standalone/4
Controls	-DERD1:N.O.	OPENING OUTGOING					3	125		=sGate uni sa+Standalone/4
Infrared Transmitter 1	+Slam-X2B:105	Photocell transmitter 1					1	126		=sGate uni sa+Standalone/6
Infrared Transmitter 1	+Slam-X2B:106	Photocell transmitter 1					2	127		=sGate uni sa+Standalone/6
Infrared Transmitter 2							3	128		=sGate uni sa+Standalone/6

Rev. date: 27-07-2022	**Type:** Standalone	**Project name** dr-unit diverse		**Page title:**	HERAS	**Page**
Version no: 4.0						
Drawn by: WWI	**Language:** en_EN	**Group code** sGate uni sa	**Description** Standalone	"+Standalone-X1A" Terminals Connection frame		12 / 15

Terminals connection list

X1A

From	Connection code	Function text	Cable No.	Cable Type.	Cable Wire	Bridge	Level	Bridge	Page
Infrared Transmitter 2							1 129		=sGate uni sa+Standalone/6
Infrared Transmitter 2							2 130		=sGate uni sa+Standalone/6
Infrared transmitter 3							3 131		=sGate uni sa+Standalone/6
Infrared transmitter 3							1 132		=sGate uni sa+Standalone/6
Infrared transmitter 3							2 133		=sGate uni sa+Standalone/6
Infrared transmitter 3							3 134		=sGate uni sa+Standalone/6
Photocell receiver 1	-FCR1:+	+	_FCO1	5x0,14 mm	BN		1 135		=sGate uni sa+Standalone/6
Photocell receiver 1	-FCR1:-	-	_FCO1	5x0,14 mm	BL		2 136		=sGate uni sa+Standalone/6
	-FCR1:WT	Photocell receiver 1	_FCO1	5x0,14 mm	WT				
	-FCR1:GS	+	_FCO1	5x0,14 mm	GS				
Photocell receiver 1	-FCR1:~	~	_FCO1	5x0,14 mm	ZW		3 137		=sGate uni sa+Standalone/6
Photocell receiver 2	-FCR2:+	+	_FCO2	5x0,14 mm	BN		1 138		=sGate uni sa+Standalone/6
	-FCR2:GS	Photocell receiver 2	_FCO2	5x0,14 mm	GS				
Photocell receiver 2	-FCR2:-	-	_FCO2	5x0,14 mm	BL		2 139		=sGate uni sa+Standalone/6
	-FCR2:WT	Photocell receiver 2	_FCO2	5x0,14 mm	WT				
Photocell receiver 2	-FCR2:~	~	_FCO2	5x0,14 mm	ZW		3 140		=sGate uni sa+Standalone/6
Photocell receiver 2	-FCR3:+	+	_FCO3	5x0,14 mm	BN		1 141		=sGate uni sa+Standalone/6
	-FCR3:WT	-	_FCO3	5x0,14 mm	WT				
Photocell receiver 3	-FCR3:-	-	_FCO3	5x0,14 mm	BL		2 142		=sGate uni sa+Standalone/6
	-FCR3:GS	Photocell receiver 3	_FCO3	5x0,14 mm	GS				
Photocell receiver 3	-FCR3:~	~	_FCO3	5x0,14 mm	ZW		3 143		=sGate uni sa+Standalone/6
Traffic light incoming	-VL1.1:RD	Red	_VL1	7x0.14 mm²	RS		1 144		=sGate uni sa+Standalone/7
	+Slam-X2B:111	Traffic light incoming							
Traffic light incoming	-VL1.1:GN	Green	_VL1	7x0.14 mm²	WT		2 145		=sGate uni sa+Standalone/7
	+Slam-X2B:112	Traffic light incoming							
Traffic light incoming	-VL1.1:-0V	-0V	_VL1	7x0.14 mm²	BL		3 146		=sGate uni sa+Standalone/7
	+Slam-X2B:113	Traffic light incoming							
Traffic light outgoing	-VL2.1:RD	Red	VL2	7x0.14 mm²	RS		1 147		=sGate uni sa+Standalone/7
	+Slam-X2B:115	Traffic light outgoing							
Traffic light outgoing	-VL2.1:GN	Green	VL2	7x0.14 mm²	WT		2 148		=sGate uni sa+Standalone/7

Rev. date: 27-07-2022 **Version no:** 4.0 **Drawn by:** WWI	**Type:** Standalone **Language:** en_EN	**Project name** dr-unit diverse **Group code** sGate uni sa **Description** Standalone	**Page title:** "+Standalone-X1A" Terminals Connection frame	HERAS	**Page** 13 / 15

Industrialization_klemmenaansluitlijst_Voorwaardelijk

Terminals connection list

X1A

From	Connection code	Function text	Cable No.	Cable Type.	Cable Wire	Bridge	Level	Bridge	Page
	+Slam-X2B:116	Traffic light outgoing							
Traffic light outgoing	-VL2.1:-0V	-0V	VL2	7x0.14 mm²	BL		3 149		=sGate uni sa+Standalone/7
	+Slam-X2B:117	Traffic light outgoing							
Third parties	-X1A:151	Third parties			RD		1 150		=sGate uni sa+Standalone/7
	-X1A:152	Loop 3			RD				
Third parties	-X1A:150	Third parties			RD		2 151		=sGate uni sa+Standalone/7
Loop 3	-X1A:150	Third parties			RD		3 152		=sGate uni sa+Standalone/7

Industrialization_klemmenaansluitlijst_Voorwaardelijk

Terminals connection list

X1B

From	Connection code	Function text	Cable No.	Cable Type.	Cable Wire	Bridge	Level		Bridge	Page
	-DC1:N.C.		_DC1	4x0,14 mm²	WT1	'	1	101	'	=sGate uni sa+Standalone/9
	-DC1:COM		_DC1	4x0,14 mm²	WT2	'	2	102	'	=sGate uni sa+Standalone/9
	-DC2:COM		_DC2	4x0,14 mm²	WT1	'	1	103	'	=sGate uni sa+Standalone/9
	-DC2:N.C.		_DC2	4x0,14 mm²	WT2	'	2	104	'	=sGate uni sa+Standalone/9
	+Slam-X2B:101					'	1	105	'	=sGate uni sa+Standalone/9
	+Slam-X2B:103					'	2	106	'	=sGate uni sa+Standalone/9
Spare						'	1	107	'	=sGate uni sa+Standalone/9
Spare						'	2	108	'	=sGate uni sa+Standalone/9
Spare						'	1	109	'	=sGate uni sa+Standalone/9
Spare						'	2	110	'	=sGate uni sa+Standalone/9

Type: Slam

Group: sGate uni sa Standalone

Version no: 4.0

Language: en_EN

Rev. date:	27-07-2022	**Type:**	Slam	**Project name**	dr-unit diverse			**Page title:**	**Page**
Version no:	4.0								
Drawn by:	WWI	**Language:**	en_EN	**Group code**	sGate uni sa	**Description**	Standalone	Title Sheet / Front Sheet	1 / 5

Index

[STANDALONE SLAM]

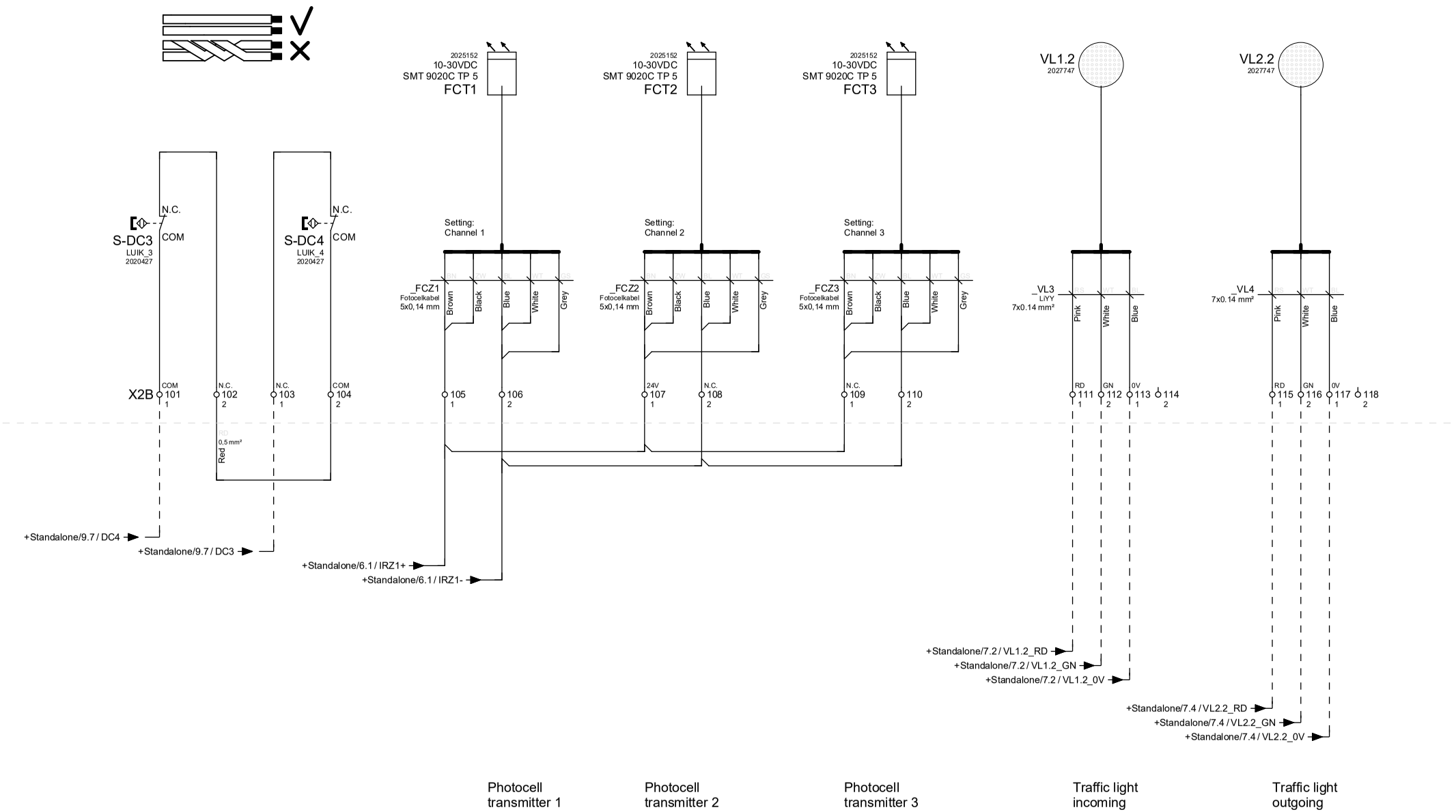

Rev. date:	27-07-2022	**Type:**	Slam	**Project name**	dr-unit diverse			**Page title:**	**Page**
Version no:	4.0								
Drawn by:	WWI	**Language:**	en_EN	**Group code**	sGate uni sa	**Description**	Standalone	Mounting plate for HCU / traffic light(s)	3 / 5

[STANDALONE SLAM]

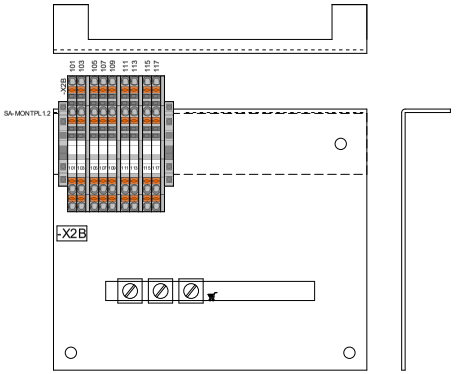

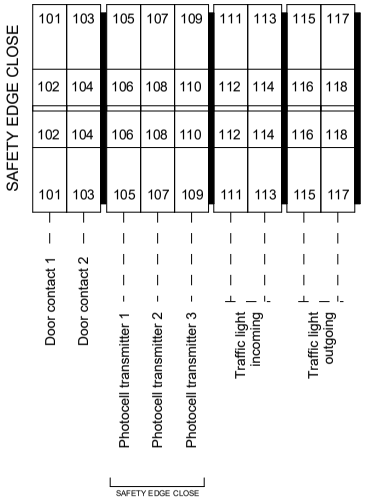

Rev. date:	27-07-2022	**Type:**	Slam	**Project name**	dr-unit diverse			**Page title:**	**Page**
Version no:	4.0								
Drawn by:	WWI	**Language:**	en_EN	**Group code**	sGate uni sa	**Description**	Standalone	View mounting plate	4 / 5

Industrialization_klemmenaansluitlijst_Voorwaardelijk

Terminals connection list

X2B

From	Connection code	Function text	Cable No.	Cable Type.	Cable Wire	Bridge	Level		Bridge	Page
	+Standalone-X1B:105						1	101		=sGate uni sa+Slam/3
	-X2B:104				RD		2	102		=sGate uni sa+Slam/3
	+Standalone-X1B:106						1	103		=sGate uni sa+Slam/3
	-X2B:102				RD		2	104		=sGate uni sa+Slam/3
Photocell transmitter 1	+Standalone-X1A:126	Infrared Transmitter 1					1	105		=sGate uni sa+Slam/3
Photocell transmitter 1	+Standalone-X1A:127	Infrared Transmitter 1					2	106		=sGate uni sa+Slam/3
Photocell transmitter 2							1	107		=sGate uni sa+Slam/3
Photocell transmitter 2							2	108		=sGate uni sa+Slam/3
Photocell transmitter 3							1	109		=sGate uni sa+Slam/3
Photocell transmitter 3							2	110		=sGate uni sa+Slam/3
Traffic light incoming	+Standalone-X1A:144	Traffic light incoming					1	111		=sGate uni sa+Slam/3
Traffic light incoming	+Standalone-X1A:145	Traffic light incoming					2	112		=sGate uni sa+Slam/3
Traffic light incoming	+Standalone-X1A:146	Traffic light incoming					1	113		=sGate uni sa+Slam/3
Spare							2	114		=sGate uni sa+Slam/3
Traffic light outgoing	+Standalone-X1A:147	Traffic light outgoing					1	115		=sGate uni sa+Slam/3
Traffic light outgoing	+Standalone-X1A:148	Traffic light outgoing					2	116		=sGate uni sa+Slam/3
Traffic light outgoing	+Standalone-X1A:149	Traffic light outgoing					1	117		=sGate uni sa+Slam/3
Spare							2	118		=sGate uni sa+Slam/3

Rev. date: 27-07-2022 **Version no:** 4.0 **Drawn by:** WWI	**Type:** Slam **Language:** en_EN	**Project name** dr-unit diverse **Group code** sGate uni sa	**Description** Standalone	**Page title:** "+Slam-X2B" Terminals Connection frame	HERAS	**Page** 5 / 5

Eplan version: 2.9.4

Type: Appendix sa

Group: sGate uni sa Standalone

Version no: 4.0

Language: en_EN

Rev. date:	27-07-2022	**Type:**	Appendix sa	**Project name**	dr-unit diverse			**Page title:**	**Page**
Version no:	4.0								
Drawn by:	WWI	**Language:**	en_EN	**Group code**	sGate uni sa	**Description**	Standalone	Title Sheet / Front Sheet	1 / 5

Index

Appendix: A | Input messages on display

Notification Master	clamp description	Connection Feig	Terminal no.	Function
E.000	Open	X502	-	Open key foil keyboard
E.050	Stop	X502	-	Stop button foil keyboard
E.090	Closed	X502	-	Close key foil keyboard
E.101	IN1	52	X1A:124	Open ingoing
E.102	IN2	53	X1A:125	Open outgoing
-	-	-	-	Semi opening
E.104	IN4	72	-	Stop
-	-	-	-	Photocell receiver 1
E.106	IN6	82	X1A:143	Photocell receiver 2
-	-	-	-	Photocell receiver 3
E.108	IN8	61	X1A:106	Photocell receiver 4 wall
-	-	-	-	-
E.380	IN10	65	X1A:109	Safety edge open
E.360	Si-LEI	43	X1A:101	Safety edge close
-	-	-	-	-
-	-	-	-	-
E.113	IN13	Det3	X1A:119-120	Column side safety loop
E.114	IN14	Det4	X1A:121-122	Leaf side safety loop
E.121	IN21	331	X1A:151	Emergency open
E.122	IN22	334	X1A:152	Emergency close
E.123	IN23	341	-	Opening dead man's
E.124	IN24	361	-	Closing dead man's
E.125	IN25	362	-	Normal closing

Appendix: B | Connecting photocells configuration

Gray & White Control The Channel

Setting: Channel 1

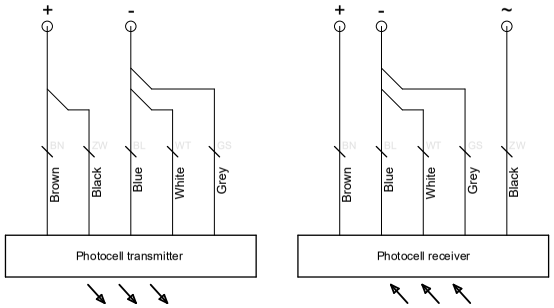

Setting: Channel 2

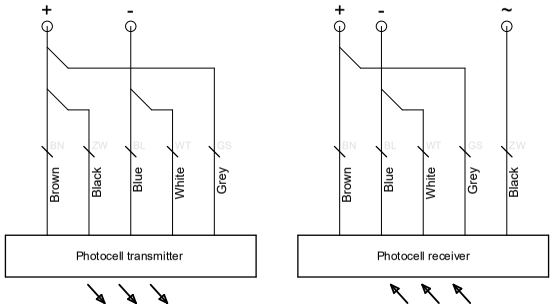

Setting: Channel 3

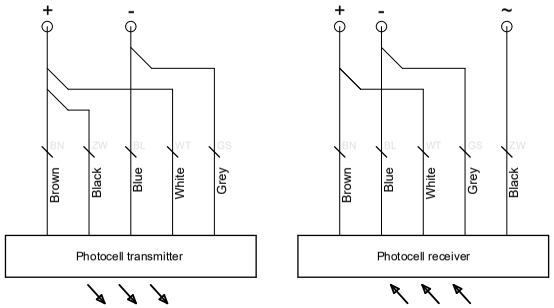

Setting: Channel 4

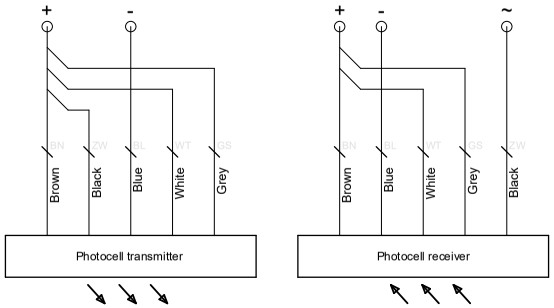

Appendix: C | Alternative without loops

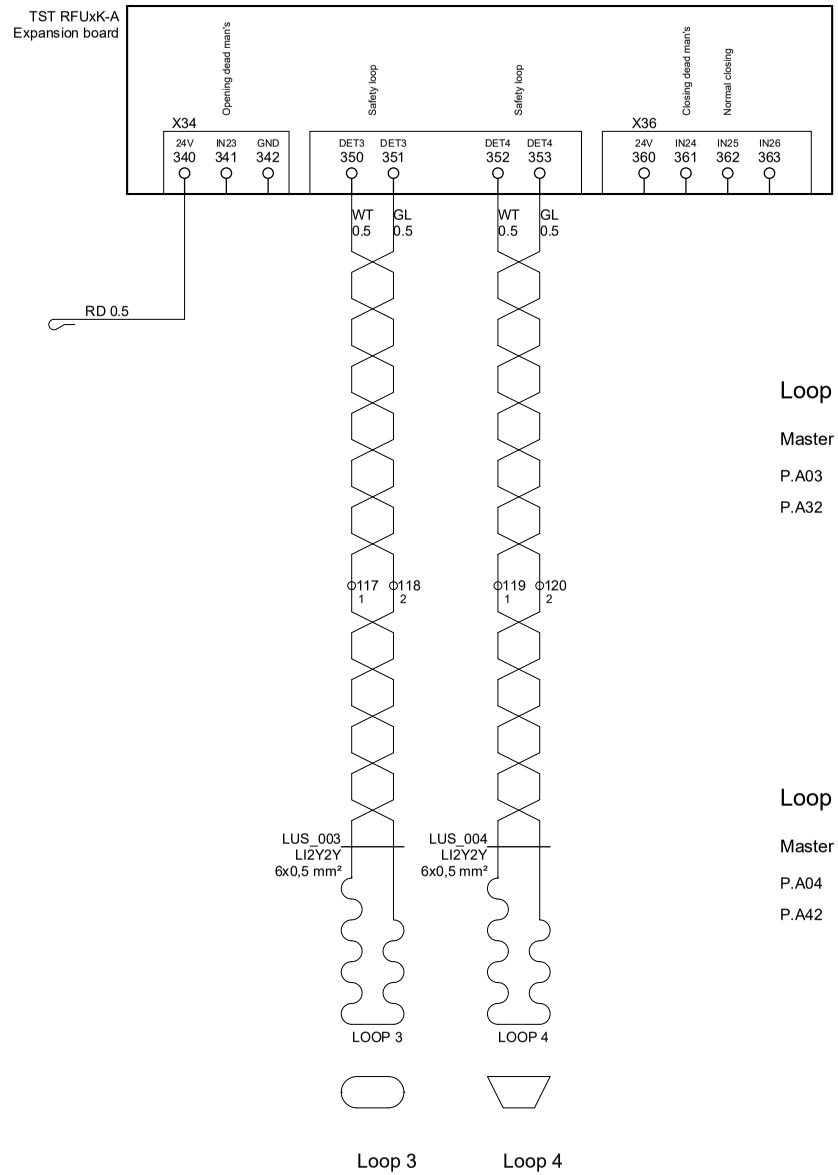

Standard with safety loops

Loop 3

Loop 3	→	Alternative [in23]
Master Default		Master Alternatief
P.A03 1501		P.A03 1803
P.A32 0		P.A32 1 (N.C.)

PASSWORD LEVEL: 3

Loop 4

Loop 4	→	Alternative [in24]
Master Default		Master Alternatief
P.A04 1502		P.A04 1804
P.A42 0		P.A42 1 (N.C.)

PASSWORD LEVEL: 3

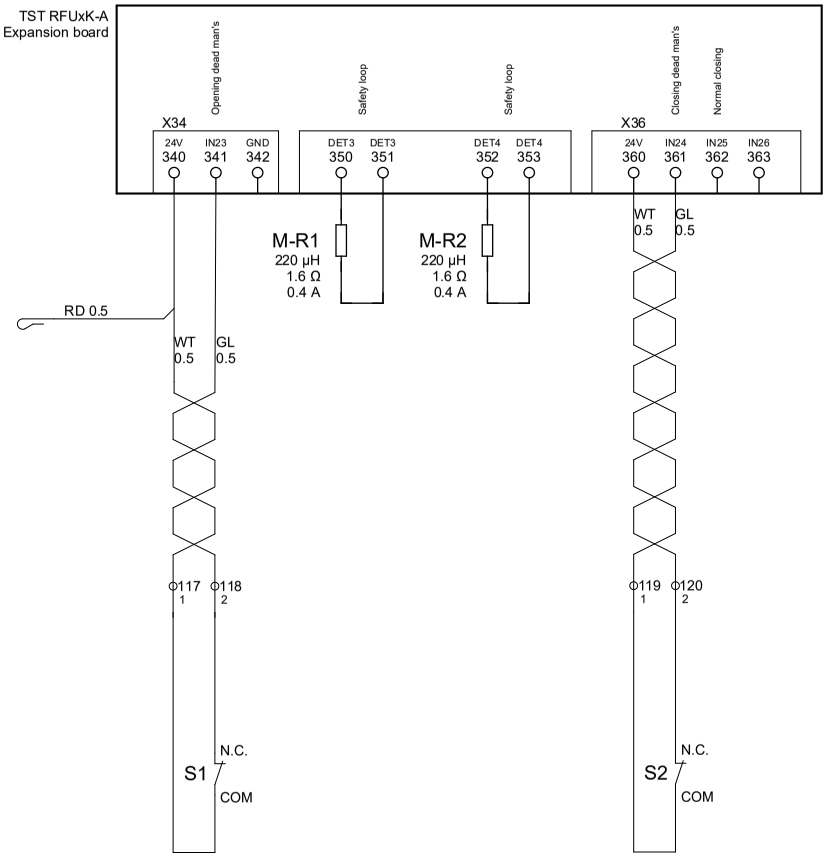

Alternative without safety loops

Rev. date:	27-07-2022	**Type:**	Appendix sa	**Project name**	dr-unit diverse			**Page title:**	**Page**
Version no:	4.0								
Drawn by:	WWI	**Language:**	en_EN	**Group code**	sGate uni sa	**Description**	Standalone	Appendix: C | Alternative without loops	C / 5